35 CENTS

PIONEER

ILLUSTRATED PARTS CATALOGUE

models P20 & P25

FINAL EDITION

PART NO. 430452 REPRINTED APRIL 80

PRINTED IN CANADA

Leon's Original Parts & Repair
Do Not Sell or Reproduce

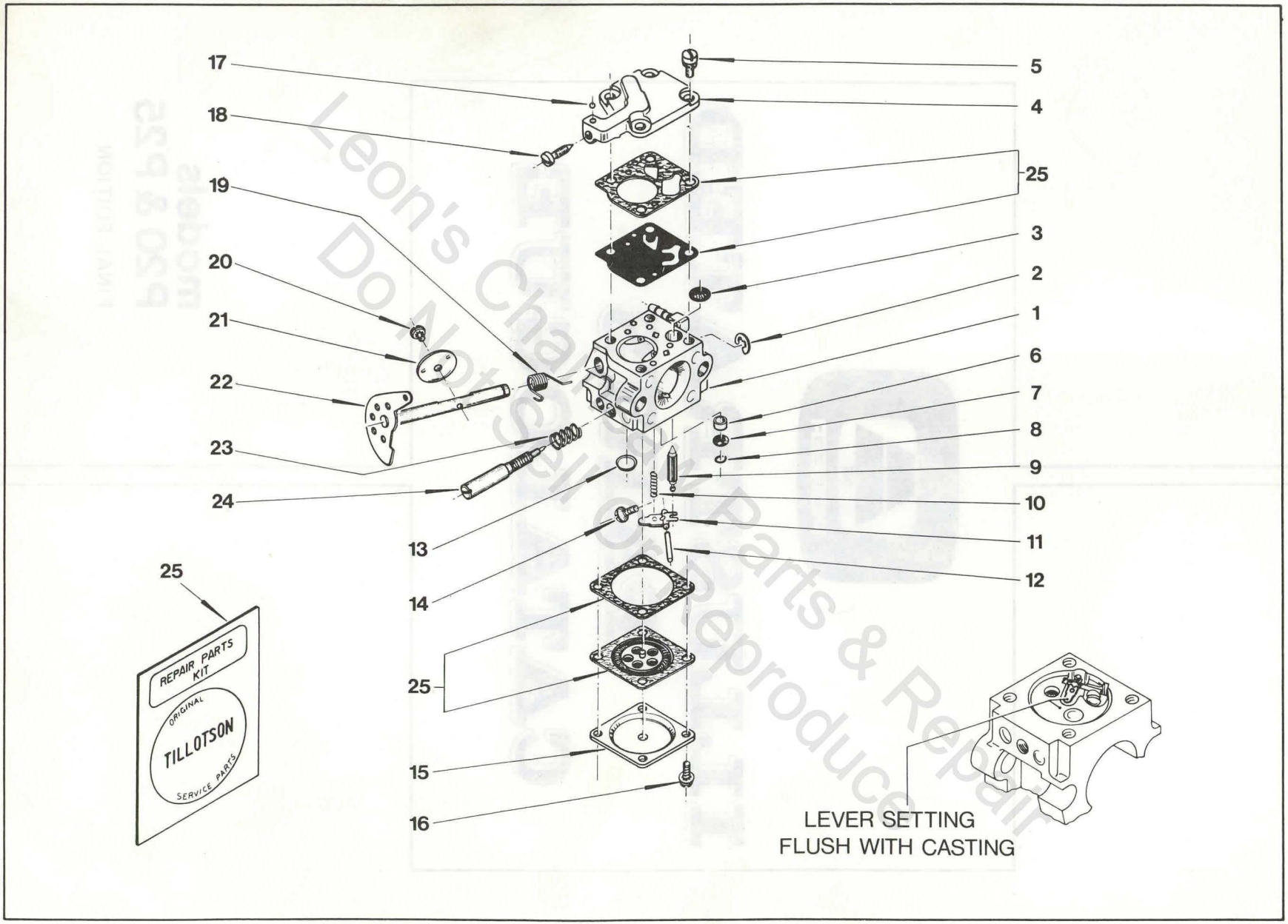

Leon's Chainsaw Parts & Repair
Do Not Sell Or Reproduce

REV. 5/76

PIONEER MODELS P20, P25

REF. NO.	PART NO.	NAME OF PART	QTY. PER ASSY.	REF. NO.	PART NO.	NAME OF PART	QTY. PER ASSY.
1	473870	Carburetor Assembly Complete. . .	1	*14	427962	. Screw, 4-40 x 5/16 Oval Hd. . .	1
2	430281	. "E" Ring	1	15	430289	. Cover, Diaphragm	1
*3	427951	. Screen	1	16	426145	. Screw & Lockwasher, 4-40 x 1/4 RD.HD	4
4	430298	. Cover, Pump	1				
5	430296	. Screw & Lockwasher (6-32 x 5/16 FIL.HD.).	4	17	430285	. Ball 3/32 DIA Nylon	1
				*18	430301	. Screw, Idle Speed Regulating . .	1
6	430302	. Cage, Main Fixed Orifice & Nozzle	1	*19	430299	. Spring, Throttle Return	1
				*20	430280	. Screw & Lockwasher, 4-40 x 3/16 RD. HD.	1
7	427942	. Screen	1				
8	427943	. Ring, Retainer	1	21	430898	. Shutter, Throttle.	1
9	427952	. Needle, Inlet	1	22	473959	. Throttle Shaft & Lever Assy. . .	1
*10	430293	. Spring, Tension	1	*23	425449	. Spring Adjusting Screw	1
*11	430297	. Lever, Inlet Valve Control . . .	1	24	430300	. Screw, Idle Adjustment	1
*12	430295	. Pin, Fulcrum	1	*25	474800	Diaphragm & Gasket Set	1
*13	430294	. Plug, 9/32 Dia. Welch	1				

* NOTE: Parts included in repair parts kit part no. 473960

INDENTED PART NAMES INDICATE THAT THESE PARTS ARE INCLUDED IN PRECEDING ASSEMBLY

ORDER ALL PARTS FROM YOUR LOCAL AUTHORIZED DEALER

Leons Chainsaw Parts & Repair Do Not Sell Or Reproduce

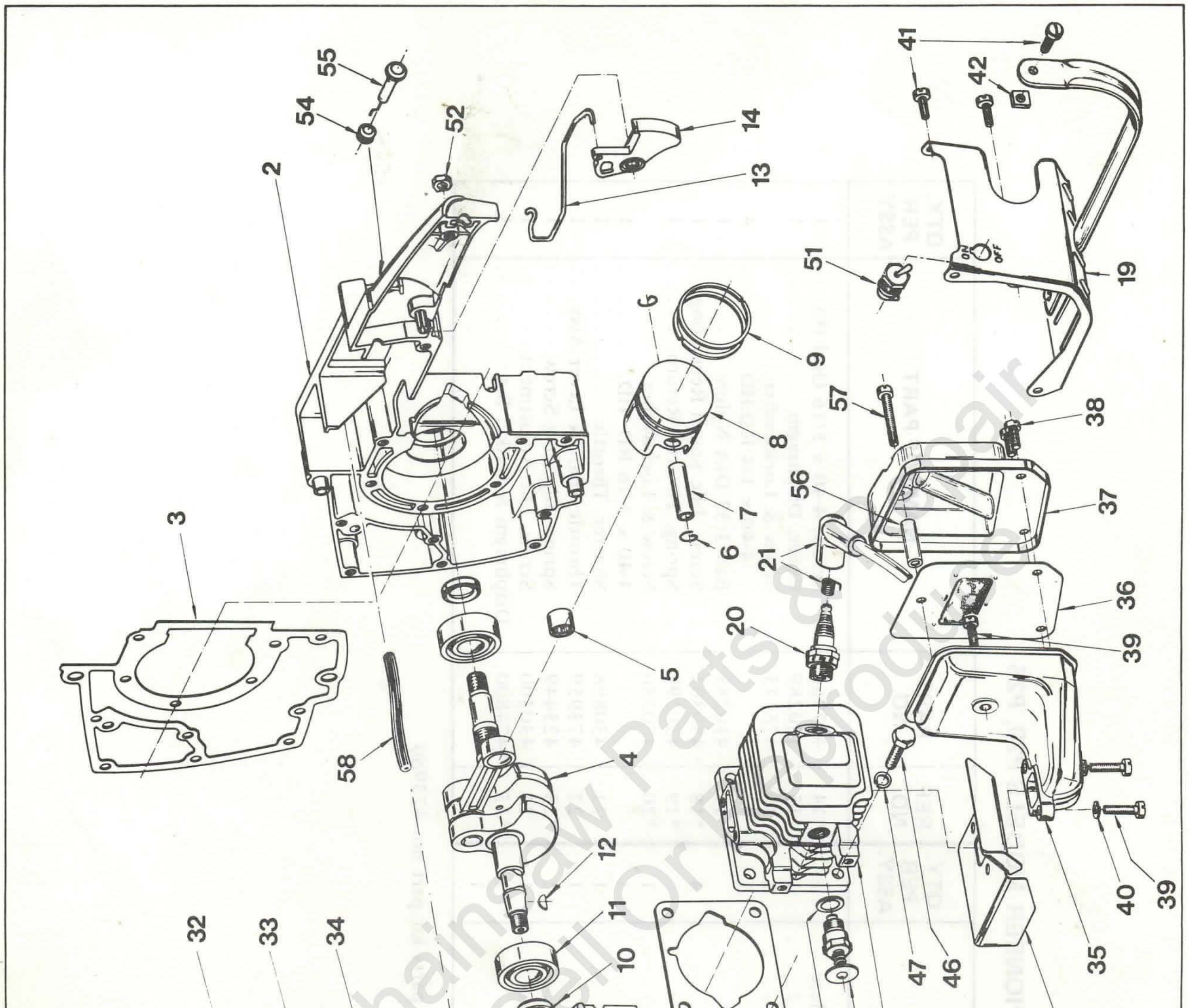
Leon's Chainsaw Parts & Repair
Do Not Sell Or Reproduce

REV. 5/76

PIONEER MODELS P20, P25

REF. NO.	PART NO.	NAME OF PART	QTY. PER ASSY.	REF. NO.	PART NO.	NAME OF PART	QTY. PER ASSY.
1	474615	Crankcase Half Assy., Mag. Side	1	31	430112	. Washer, Air Filter Cover	1
2	474423	Crankcase Half Assy., Strut Side	1	32	430445	. Air Filter Cover	1
3	430442	Gasket, Crankcase	1	33	430520	Air Filter Element	1
4	474536	Crankshaft & Conrod Assy	1	34	430519	Sealing Strip, Air Filter Cover	1
5	427662	Bearing, Wristpin	1	35	429567	Muffler Body	1
6	427671	Retainer, Wristpin	2	36	473916	Baffle & Screen Assy	1
7	429216	Wristpin	1	37	474419	Cover, Muffler	1
8	474576	Piston Assembly	1	38	307193	Screw, Muffler Cover	2
9	473155	Piston Ring Set	1	39	510195	Screw, Muffler to cylinder	3
10	428746	Oil Seal	2	40	306546	Lockwasher, Muffler to cylinder	2
1	427849	Main Bearing	2	41	306286	Screw, Cylinder Shroud to C'Case	2
12	430589	Key, Flywheel	1			Screw, Handle Brace	1
13	430119	Throttle Link	1	42	306542	Nut, Handle Brace	1
14	427696	Throttle Trigger	1	43	311516	Screw, Condenser to Crankcase	1
15	429262	Gasket, Cylinder	1	44	307190	Screw, Crankcase Halves	12
16	430398	Cylinder	1	45	316133	Screw, Cylinder Shroud to C'Case	1
17	429309	Muffler Shroud	1	46	300635	Screw, Cylinder Base	4
18	473524	Decompression Valve Assy	1	47	306985	Lockwasher, Cylinder Base	4
19	474605	Cylinder Shroud	1	48	315381	Nut, Cylinder Base	4
20	428601	Spark Plug (CJ6)	1	49	429702	Washer, Decompression Valve	1
21	580339	Sparky Cover Assembly	1	50	473589	Air Vent Valve (packaged)	1
22	473770	Oil Cap Assy	1			Prior to serial no. 980682	
23	310585	"O" Ring - Oil Cap	1		474753	Air Vent Valve (packaged)	1
24	473769	Gas Cap Assy	1			After serial no. 908682	
25	308624	. "O" Ring - Gas Cap	1	51	473965	Grounding Switch	1
26	473161	Condenser Assembly	1	52	306531	Nut, Rear Handle	1
27	430474	Decal-Air Filter Cover(P20 only)	1	53	307175	Screw, Rear Handle	1
27	430475	Decal-Air Filter Cover(P25 only)	1	54	429650	Grommet, Choke Knob	1
*	474425	Air Filter Cover Ass'y	1	55	430113	Choke Knob	1
28	430111	. Pin, Air Filter Cover	1	56	430439	Spacer - Muffler	1
29	309301	. Roll Pin, Air Filter Cover	1	57	319430	Screw - Muffler	1
30	430115	. Spring, Air Filter Cover	1	58	429677	Hose - Fuel Vent	1

* NOT SHOWN

The Pioneer P-25 is equipped with the Pioneer 16" Roller Nose Bar Part No. 474254 and Pioneer 3/8" Pitch Duraguard Chain Part No. 473885. Optional Bars & Chain can be purchased through your local Pioneer Dealer.

The Pioneer Model P-20 is equipped with the Pioneer 14" Bar Part No. 473924 and Pioneer 3/8 Pitch Duraguard Chain Part No. 473877. Optional Bars & Chain can be purchased through your local Pioneer Dealer.

Leon's Chainsaw Parts & Repair
Do Not Sell Or Reproduce

INDENTED PART NAMES INDICATE THAT THESE PARTS ARE INCLUDED IN PRECEDING ASSEMBLY

ORDER ALL PARTS FROM YOUR LOCAL AUTHORIZED DEALER

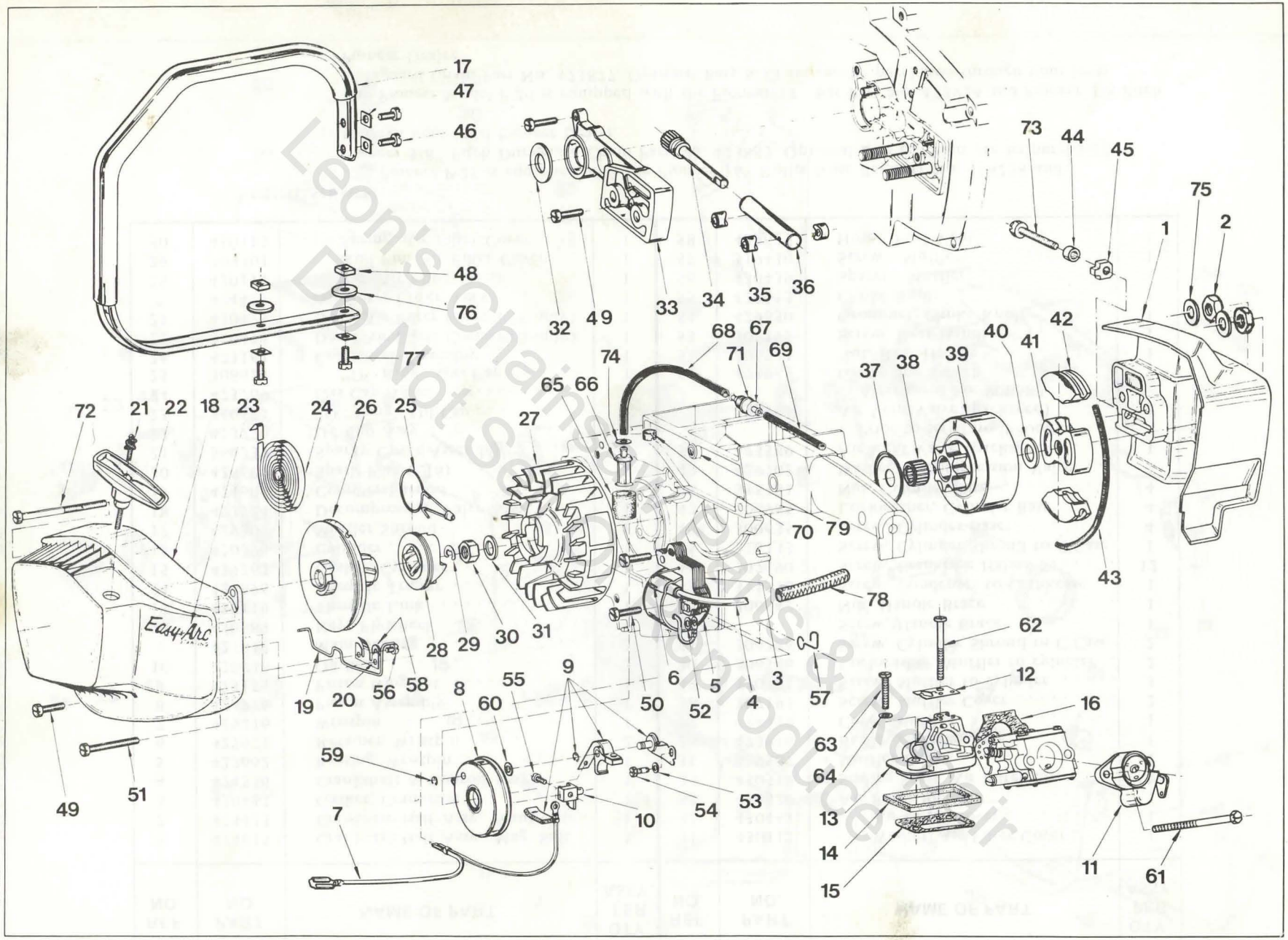

Leon's Chainsaws & Repair
Do Not Sell or Reproduce

PIONEER MODELS P20, P25

REF. NO.	PART NO.	NAME OF PART	QTY. PER ASSY.	REF. NO.	PART NO.	NAME OF PART	QTY. PER ASSY.
1	474418	Strut Assembly	1	42	429251	Clutch Shoe	2
2	425031	Nut, strut	2	43	426964	Garter Spring	1
3	473341	Core Assembly	1	44	429637	Chain Adjuster, Stop Chain Tensioner	1
4	427745	H. T. Lead	1				
5	473340	Coil with H. T.	1	45	425672	Spring, Chain Adj., Pin, Chain Tensioner	1
6	429422	Retainer	1				
7	473627	Switch Wire Assembly	1	46	510338	Screw, Front Handle	2
8	429929	Ignition Cover	1	47	429472	Washer, Front Handle	4
9	473750	Breaker Point Set with Wiper	1	48	306542	Nut, Front Handle	2
10	429925	Terminal Block	1	49	510195	Screw, Bar Pad to Crankcase	2
11	473858	Blowback Tube & Choke Assy	1			Screw, Blower Cover to C'Case	1
12	430110	Bracket, Air Filter Cover	1	50	309483	Screw, Coil Lamination	2
*	473865	Insulating Block Assy. Complete	1	51	318521	Screw, Blower Cover to C'Case	1
13	430105	● Insulating Block	1	52	300154	Washer, Lamination	1
14	429305	● Seal - Insulating Block	1	53	303497	Washer, Base Breaker Plate	1
15	430102	● Gasket - Cyl. to Intake	1	54	429928	Screw, Base Breaker Plate	1
16	430103	● Gasket - Insulating Bl. to Carb.	1	55	429266	Screw, Terminal	1
17	474521	Front Handle Assembly	1	56	309467	Screw, Decompression Valve	2
18	474420	Blower Cover Assy	1	57	430052	Clip Assy., H.T. Lead	1
19	429573	Lever, Decompression Valve	1	58	308507	Washer, Decompression	1
20	429575	Spring, Lever	1	59	202755	Retaining Ring, Breaker Pin	1
21	429278	Starter Rope	1	60	429927	Seal, Breaker Housing	1
22	429549	Starter Handle	1	61	318521	Screw, Carburetor	2
23	430534	Decal "Easy* Arc"	1	62	316781	Screw, Insulating Block	1
24	604257	Starter Spring	1	63	305879	Screw, Insulating Block	1
25	473637	Yoke Assy	1	64	305863	Washer, Insulating Block	1
26	430609	Starter Pulley	1	65	430885	Felt-Pickup	1
27	473160	Flywheel Assembly	1	66	474397	Fuel Pick-up Assembly	1
28	429892	Pinion	1	67	473772	Connector Assy. -Pickup Head to Tank Wall	1
29	429246	Retaining Ring	1				
30	404837	Nut, Flywheel	1	68	429677	Fuel Line - Pickup Head	1
31	429851	Washer, Flywheel	1	69	429970	Fuel Line - Tank to Carb.	1
32	427917	Seal Washer	1	70	430545	Clamp Fuel Pickup	2
33	430352	Bar Pad	1	71	305857	"O" Ring - Connector	1
34	473166	Plunger Assembly Oil Pump	1	72	430444	Screw, Blower Cover to C'Case	1
35	429274	Spacer, Oil Pump	3	73	201767	Screw, Chain Tensioner	1
36	473869	Pump Assembly Oil Pump	1	74	302474	Washer - Pickup	1
37	429672	Thrust Washer, Inner Clutch	1	75	306453	Washer	2
38	429526	Bearing, Clutch	1	76	308279	Washer, handle to crankcase	2
39	474447	Sprocket & Clutch	1	77	306286	Screw, Front Handle	2
40	429252	Thrust Washer, Outer Clutch	1	78	430694	Sleeve, H. T. Lead	1
41	429250	Clutch Driver	1	79	430104	Sleeve, Low Speed Adjustment	1

* NOT SHOWN

Leon's Chainsaw Parts
Not To Sell Or Reproduce

INDENTED PART NAMES INDICATE THAT THESE PARTS ARE INCLUDED IN PRECEDING ASSEMBLY

ORDER ALL PARTS FROM YOUR LOCAL AUTHORIZED DEALER

Leon's Chainsaw Parts & Repair
Do Not Sell Or Reproduce