SUPER 10-10E Chain Saw

MODEL 600012 SERIAL NUMBERS PREFIXED 11-

ILLUSTRATED PARTS LIST

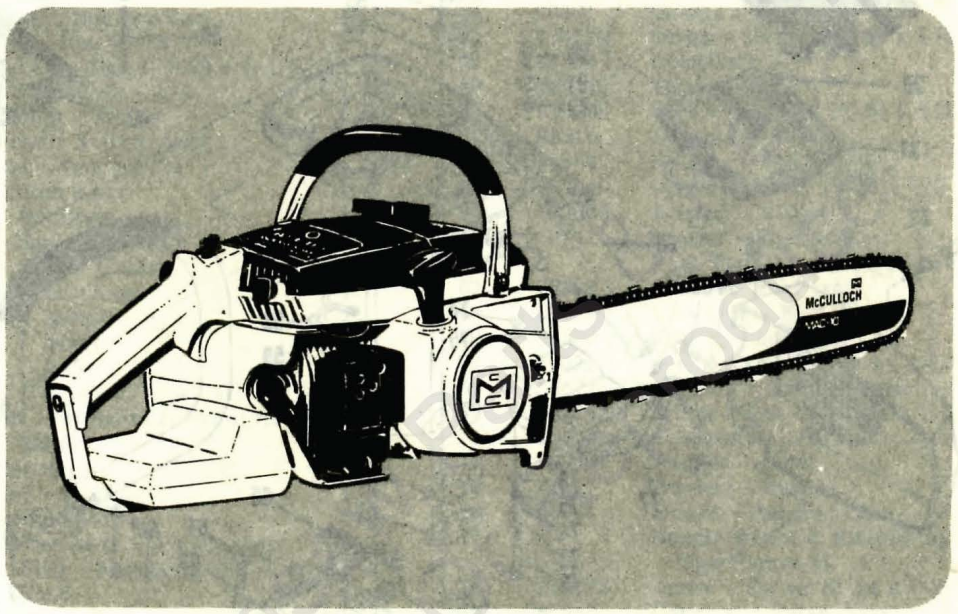

August 1969

The policy of McCulloch Corporation is one of continual improvement in design, manufacturing and engineering advancement wherever possible to assure still finer two-cycle power tools. Hence, specifications, equipment, colors, design and manufacturer's suggested list prices are subject to change without notice and McCulloch Corporation reserves the right to make such changes without prior notification or obligation to backfit or supply backfit components for units previously shipped from the factory.

	Page
Figure 1. Engine Exploded View – General	2
Figure 2. Clutch Guard & Starter Assembly	4
Figure 3. Fuel Tank Assembly	4
Figure 4. Carburetor Assembly	6
Figure 5. Electrical Components	8
Figure 6. Powerhead Assembly	10

McCULLOCH®

COPYRIGHT 1969 U.S.A. - -
McCULLOCH CORPORATION

#69914

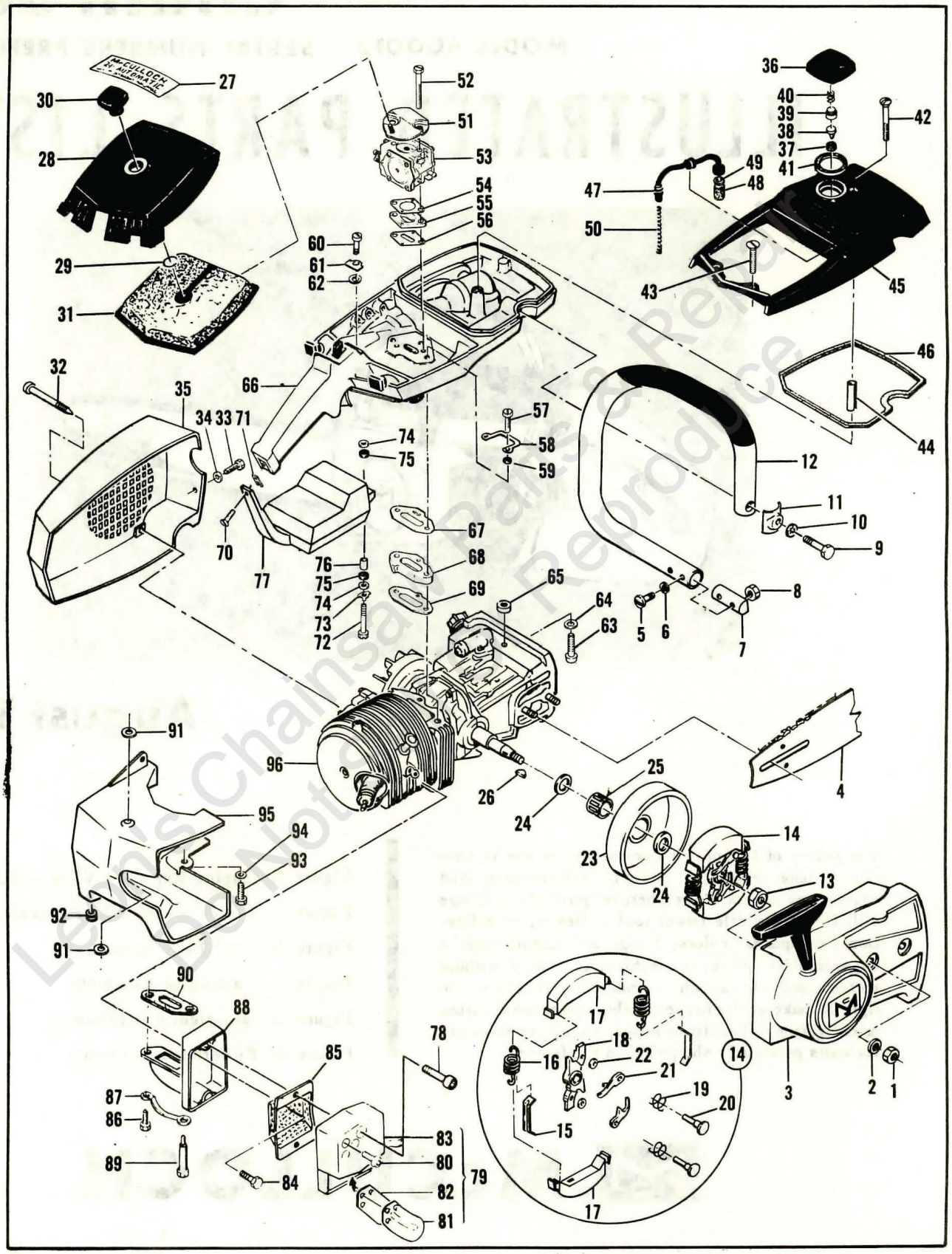

Figure 1. Engine Exploded View-General

FIGURE 1. ENGINE EXPLODED VIEW — GENERAL

Item No.	Part Number	Description	Units Per Assy
1	110454	Nut - Hex 5/16-24	2
2	100440	Washer - 5/16	2
3		Clutch Guard & Starter Assy (See Figure 2)	
4		Bar & Chain (See Figure 6)	
5	102761	Screw - Hex hd 10-24 x 7/8	2
6	100352	Washer - #10	2
7	61678	Plug - Nut retainer	1
8	101326	Nut - Hex 10-24	2
9	102130	Screw - Hex 1/4-20 x 1-1/2	1
10	100153	Lockwasher - 1/4	1
11	63484	Clamp - Frame	1
12	66315	Frame & Grip Assy	1
13	110594	Nut - Hex 3/8-24	1
14	- 83224	Clutch Assy	1
15	64583	. Retainer	2
16	- 83223	. Spring - Clutch	2
17	67233	. Shoe - Clutch	2
18	- 67149	. Rotor Assy	1
19	68837	. . Spring - Pawl	2
20	67112	. . Rivet	2
21	- 64857	. . Pawl	2
22	65473	. . Washer - Special	2
23	65370	Kit - Sprocket & Drum Assy	1
24	61692	. Shim	2
25	110330	Bearing	1
26	103879	Key - Woodruff	1
27	- 69912	Nameplate	1
28	- 68530	Cover Assy - Air cleaner	1
29	- 110565	. Ring - Retaining	1
30	- 68529	. Knob	1
31	- 69922	Filter - Air	1
32	64626	Screw - Special	3
33	105348	Screw - 10-24 x 1/2 (SEMS)	1
34	110264	Washer - #10	1
35	67297	Housing - Fan	1
36	68531	Cap Assy - Fuel	1
37	68533	. Plug	1
38	63041	. Valve	1
39	62316	. Guide	1
40	63040	. Spring	1
41	- 69767	. Gasket	1
42	- 110402	Screw - Oval hd 12-24 x 2-3/8	1
43	- 103579	Screw - Fl hd 10-24 x 1	2
44	- 69686	Spacer	1
45	- 69679	Cover - Fuel tank	1
46	69345	Gasket - Cover	1
47	64848	Hose Assy - Fuel	1
48	63932	. Filter - Fuel	1
49	100440	. Washer	1
50	67944	Spring - Hose stiffener	1

Item No.	Part Number	Description	Units Per Assy
51	- 83204	Bracket Assy	1
52	- 103357	. Screw - Hex hd 10-24 x 2-1/4	2
53		Carburetor Assy (See Figure 4)	
54	68132	Gasket - Carburetor	1
55	66678	Spacer - Carburetor	1
56	68131	Gasket - Spacer	1
57	- 110570	Screw - Hex hd 12-24 x 1-3/8	2
58	68582	Lockplate	1
59	- 102115	Washer - #12	2
60	- 110568	Screw - Hex hd 12-24 x 1-1/8	1
61	69516	Lockplate	1
62	64856	Washer - #10	1
63	- 102660	Screw - Skt hd 10-24 x 7/8	1
64	- 100003	Washer - #10	1
65	- 69772	Spacer - Fuel tank	1
66		Fuel Tank Assy (See Figure 3)	
67	- 68580	Gasket - Fuel tank	1
68	- 68614	Insulator - Fuel tank	1
69	- 68580	Gasket - Insulator	1
70	110223	Screw - Oval hd 10-24 x 5/8	1
71	66672	Cushion - Handle brace	1
72	102765	Screw - Hex hd 10-24 x 1-3/4	1
73	66673	Lockplate	1
74	105831	Washer - Steel	2
75	71017	Washer - Rubber	2
76	66674	Sleeve - Handle brace	1
77		Handle Brace & Battery Assy (See Figure 5)	
78	110473	Screw - Skt hd 10-24 x 1-5/8	2
79	65532	Cover and Valve Assy	1
80	110472	. Screw - Skt hd 8-32 x 5/16	3
81	83069	. Stop - Reed valve	1
82	64785	. Valve - Reed	1
83	65419	. Cover Assy - Spark arrester	1
84	- 110529	Screw - Hex hd 10-24 x 1/2	1
85	62379B	Baffle	1
86	110506	Screw - Hex hd 10-24 x 5/8	1
87	67922	Lockplate	1
88	- 83106	Body and Duct Assy	1
89	68187	. Screw - Hex hd 10-24 x 1-3/8	1
90	68149	Gasket - Spark arrester	1
91	68581	Insulator - Shroud	2
92	101230	Grommet	1
93	- 105025	Screw - Hex hd 12-24 x 9/16	1
94	- 102523	Washer - 1/4	1
95	67377	Shroud	1
96		Powerhead Assy (See Figure 6)	

Part numbers which have changed since the previous printing of the illustrated parts list covering these saws, are indicated by a dash (-) preceding the new part number.

Home Chainsaw Parts & Repair
Do Not Sell or Reproduce

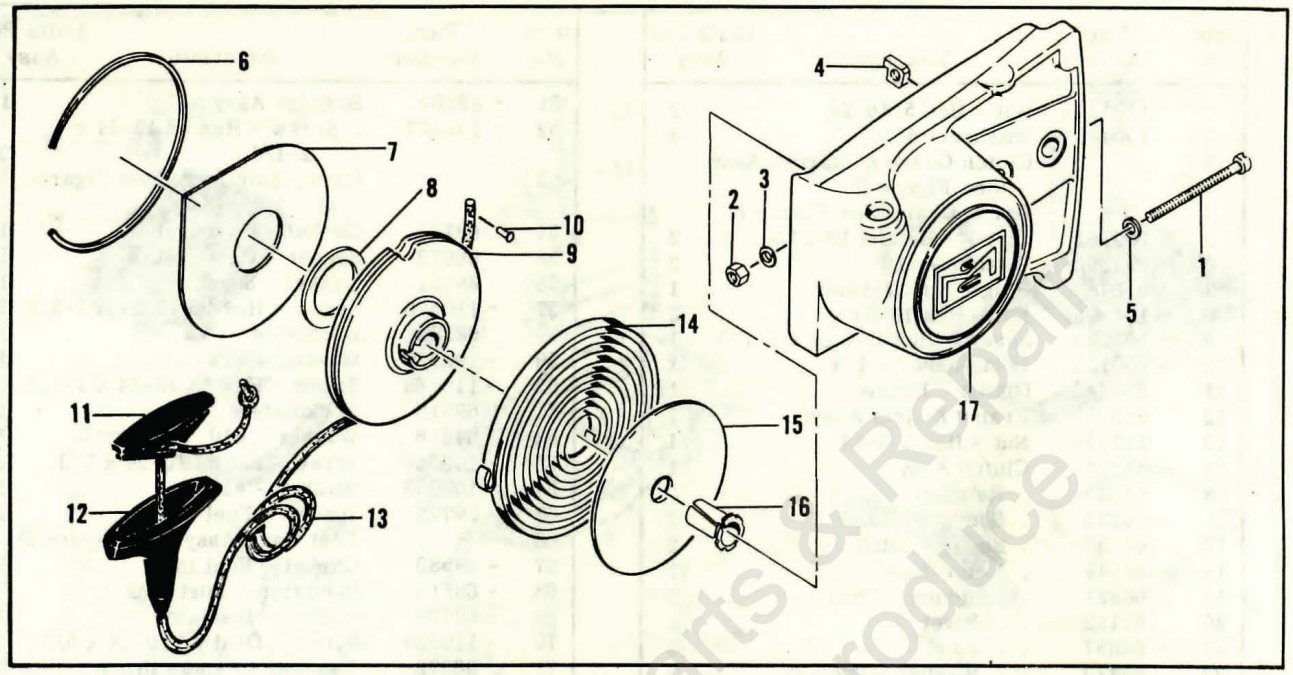

Figure 2. Clutch Guard and Starter Assembly

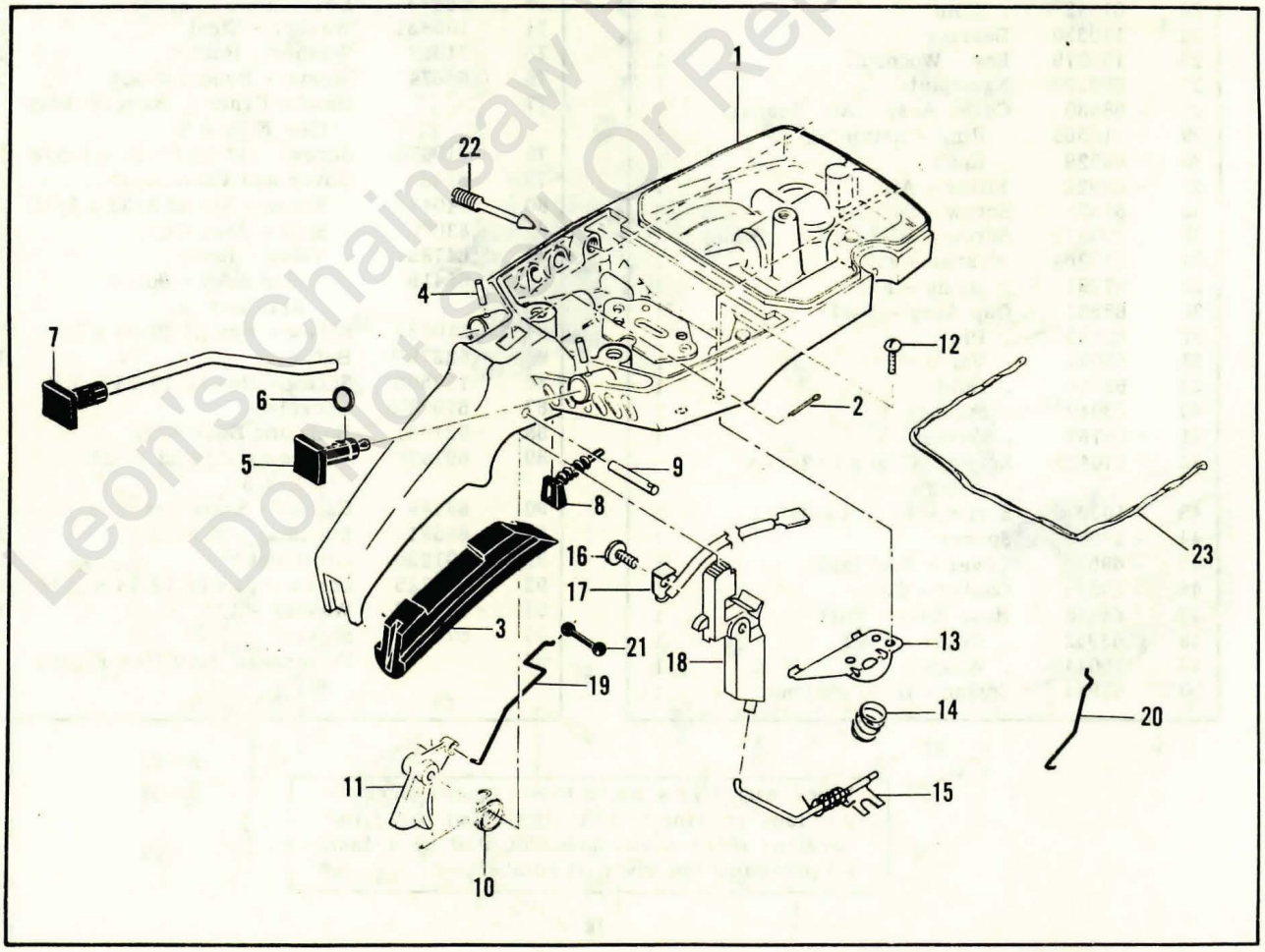

Figure 3. Fuel Tank Assembly

Leon's Chainsaw Parts & Repair
Do Not Sell Or Reproduce

FIGURE 2. CLUTCH GUARD AND STARTER ASSEMBLY

Item No.	Part Number	Description	Units Per Assy
	67206	Clutch Guard Assy	1
1	102144	. Screw - Bar adjusting	1
2	102067	. Nut - Hex 10-24	1
3	110387	. Washer - Wave	1
4	61705	. Nut - Bar adjusting	1
5	- 110264	. Washer - #10	1
6	67205	. Retainer - Shield	1
7	63985	. Shield - Dust	1
8	63986	. Washer - Thrust	1
9	68695	. Drum - Starter	1
10	110470	. Rivet - Starter rope	1
11	62191A	. Insert - Handle	1
12	62190A	. Handle - Starter	1
13	- 69964	. Rope - Starter	1
14	68626	. Spring - Rewind	1
15	63987	. Shield - Spring	1
16	61635A	. Bushing - Nyliner	1
17	67207	. Guard - Clutch	1

FIGURE 3. FUEL TANK ASSEMBLY

Item No.	Part Number	Description	Units Per Assy
1	68683	Fuel Tank Assy	1
2	100010	. Pin - Cotter	1
3	64872	Grip - Handle	1
4	105673	Pin - Roll 3/32 x 9/16	2
5	- 69041	Button - Choke	1
6	101056	"O" Ring	1
7	64871	Button & Rod Assy	1
8	68522	Seal - Throttle Rod	1
9	110378	Pin - Roll 3/16 x 15/16	1
10	65734	Spring - Throttle return	1
11	67224	Trigger	1
12	105249	Screw - Rd hd 8-32 x 3/8	2
13	64721	Bracket - Lever Assy	1
14	69687	Spring - Valve	1
15	- 69811	Lever Assy - Compression release	1
16	110385	Screw - Pan hd 8-32 x 3/8	1
17	65873	Wire Assy - Stop switch	1
18	67210	Button - Control	1
19	68170	Rod - Throttle	1
20	- 69042	Rod - Choke	1
21	- 69043	Snubber - Control rod	1
22	- 67271	Screw - Idle speed	1
23	-* 69564	Sealant - Airbox	AR

* One strip, 12-1/2 inches long, containing 9 beads of sealant (enough for 9 replacements).

Legal Chainsaw Parts & Repair
Do Not Sell Or Reproduce

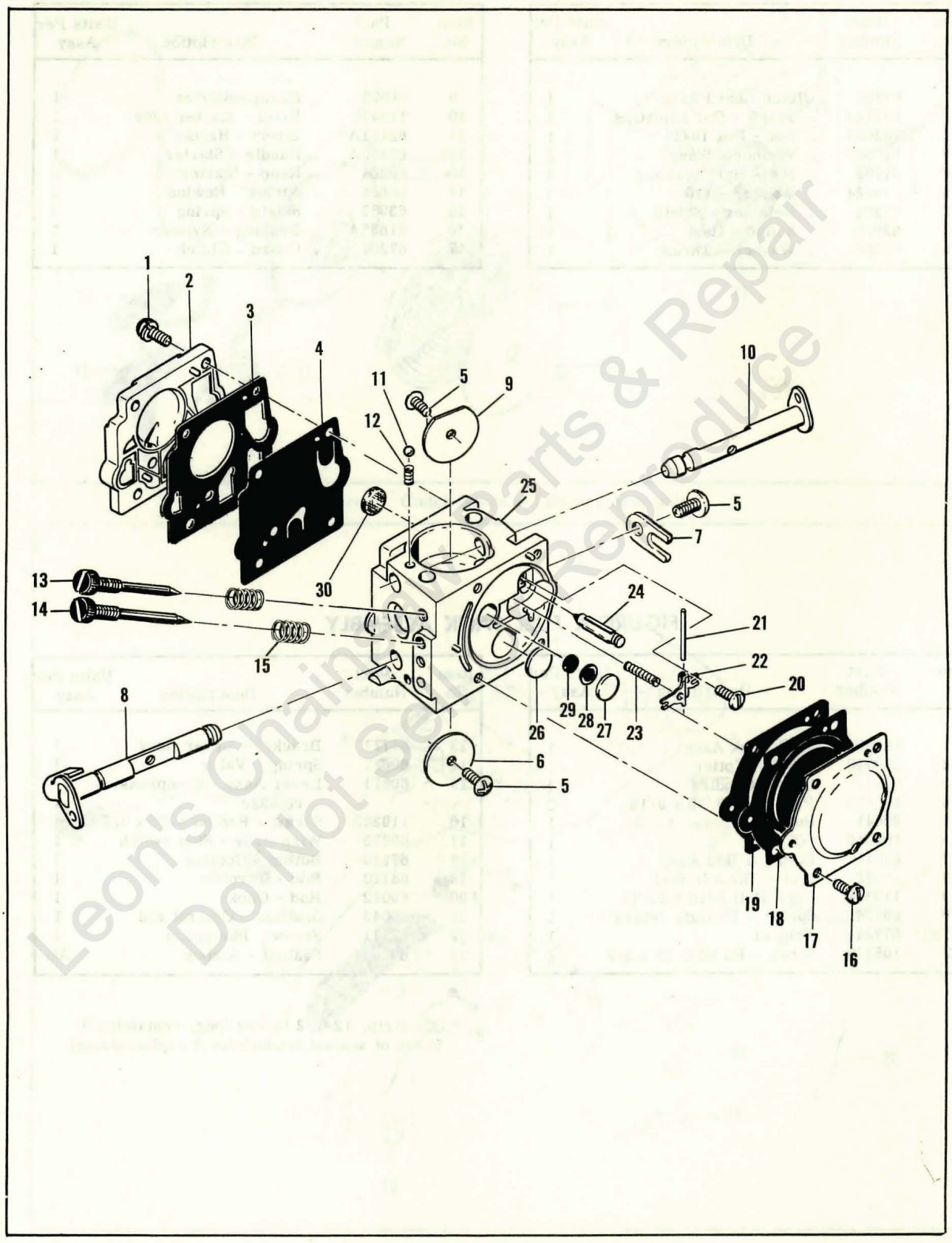

Leon's Chainsaw Parts & Repair
Do Not Sell or Reproduce

Figure 4. Carburetor Assembly

FIGURE 4. CARBURETOR ASSEMBLY

Item No.	Part Number	Description	Units Per Assy
	- 83249	Carburetor Assy	1
1	67501	. Screw - Pump cover	4
2	- 83760	. Cover - Pump	1
3	*67495	. Gasket - Cover	1
4	-*83114	. Diaphragm - Fuel pump	1
5	*47690	. Screw - Plate	3
6	67487	. Plate - Throttle	1
7	67489	. Clip - Shaft	1
8	67486	. Shaft Assy - Throttle	1
9	67490	. Plate - Choke	1
10	67488	. Shaft - Choke	1
11	*100302	. Ball - Choke friction	1
12	*67504	. Spring - Choke	1
13	- *83770	. Needle - High speed	1
14	- *83771	. Needle - Idle	1
15	*67502	. Spring - Needle	2
16	70798	. Screw - Diaphragm cover	4

Item No.	Part Number	Description	Units Per Assy
17	- 83761	. Cover - Diaphragm	1
18	*67499	. Diaphragm - Metering	1
19	*67496	. Gasket - Diaphragm	1
20	*67500	. Screw - Lever pin	1
21	*67508	. Pin - Lever	1
22	*67509	. Lever - Metering	1
23	*67503	. Spring - Lever	1
24	*67491	. Valve - Needle	1
25	- 83769	. Body Assy - Carburetor	1
26	- *71690	. . Plug - 3/8	1
27	- *69506	. . Plug - 5/16	1
28	- 69203	. . Seat Assy	1
29	- 69204	. . Valve	1
30	*67507	. . Screen - Fuel	1
	*67482	Gasket Set	
	- 83772	Repair Kit	

*Indicates parts included in Repair Kit, P/N 83772

Leon's Chainsaw Parts & Repair
Do Not Sell Or Reproduce

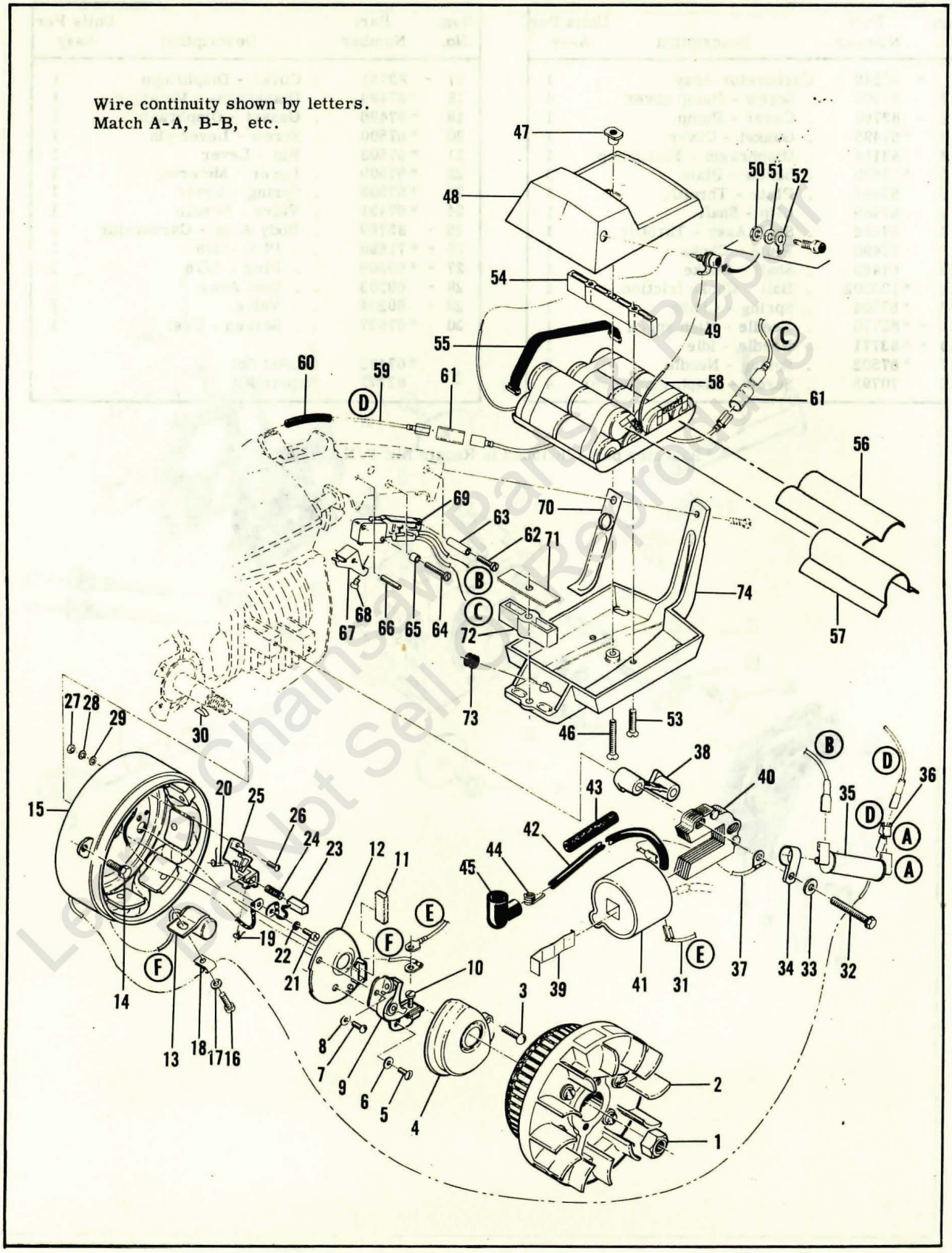

Figure 5. Electrical Components

FIGURE 5. ELECTRICAL COMPONENTS

Item No.	Part Number	Description	Units Per Assy
1	110594	Nut - Hex 3/8-24	1
2	65995	Armature & Flywheel Assy	1
3	110560	Screw - Rd hd 8-32 x 5/8	1
4	65415	Top - Breaker box	1
5	110559	Screw - Tr hd 8-32 x 1/2	1
6	105976	Washer - #8	1
7	100690	Screw - Rd hd 8-32 x 1/2	1
8	100080	Washer #8	1
9	66231	Breaker Assy	1
10	110489	. Screw - Pan hd 6-32 x 7/16	1
11	54184	Wiper	1
12	65414	Base - Breaker points	1
13	64624	Condenser	1
14	110446	Screw - Hex hd 10-24 x 3/4	2
15	65996	Housing Assy - Field coil	1
16	66005	. Screw - Fil hd 8-32 x 5/16	1
17	105464	. Lockwasher - #8	1
18	66004	. Clamp	1
19	66777	. Spring - Brush clip	1
20	66776	. Spring - Brush clip	1
21	65997	. Screw - Fil hd 5-40 x 1/4	2
22	65998	. Lockwasher - #5	2
23	65999	. Brush	2
24	66003	. Spring - Brush	2
25	66778	. Kit - Brush holder	1
26	66007	. . Screw	2
27	66009	. . Nut	2
28	66008	. . Lockwasher	2
29	66162	. . Washer	2
30	103879	Key - Woodruff	1
31	64609	Wire Assy - Primary	1
32	110450	Screw - Hex hd 10-24 x 1-5/8	2
33	100003	Washer - #10	2
34	65517	Clamp - Mounting	2
35	65518	Resistor	1
36	110478	Terminal - Wire	1
37	62819	Wire Assy - Ground	1
38	64653	Spacer - Coil	1

Item No.	Part Number	Description	Units Per Assy
39	51253	Retainer - Coil	1
40	68164	Lamination Assy	1
41 -	69798	Coil & Terminal Assy	1
42 -	69966	. Wire Assy - Spark plug	1
43	67127	. . Sleeve - Wire Assy	1
44	62932	. . Connector	1
45	62926	. . Boot - Spark plug	1
46	110480	Screw - Fl hd 8-32 x 1-3/8	1
47	65319	Insert - Cover	1
48	65470	Cover - Battery box	1
49	65567	Phono Jack	1
50	65876	. Nut	1
51	65875	. Washer	1
52	65877	. Terminal	1
53	100403	Screw - Fl hd 8-32 x 1	2
54	66234	Spacer - Battery	1
55	65501	Strap Assy - Battery	2
56 -	69916	Support - Battery	1
57 -	69917	Support - Battery	1
58	66161	Battery Assy	1
59	65541	Wire Assy - Battery to resistor	1
60	80975	Sleeve - Wire Assy	1
61	65306	Sleeve - Wire terminal	2
62	110462	Screw - Pan hd 4-40 x 11/16	1
63	64874	Spacer - Long	1
64	110463	Screw - Pan hd 4-40 x 13/16	2
65	64873	Spacer - Short	2
66	110451	Pin - Roll	1
67	64681	Actuator	1
68	110477	Screw - Actuator pan hd 6-32 x 3/16	1
69	68145	Switch - Regulator Assy	1
70	64727	Strip - Handle brace	1
71	65512	Insulator - Shroud	1
72	66206	Spacer - Handle	1
73	101230	Grommet - Handle brace	1
74 -	69920	Brace - Handle	1

Leon's Chainsaw Parts & Repair
Do Not Sell Or Trade

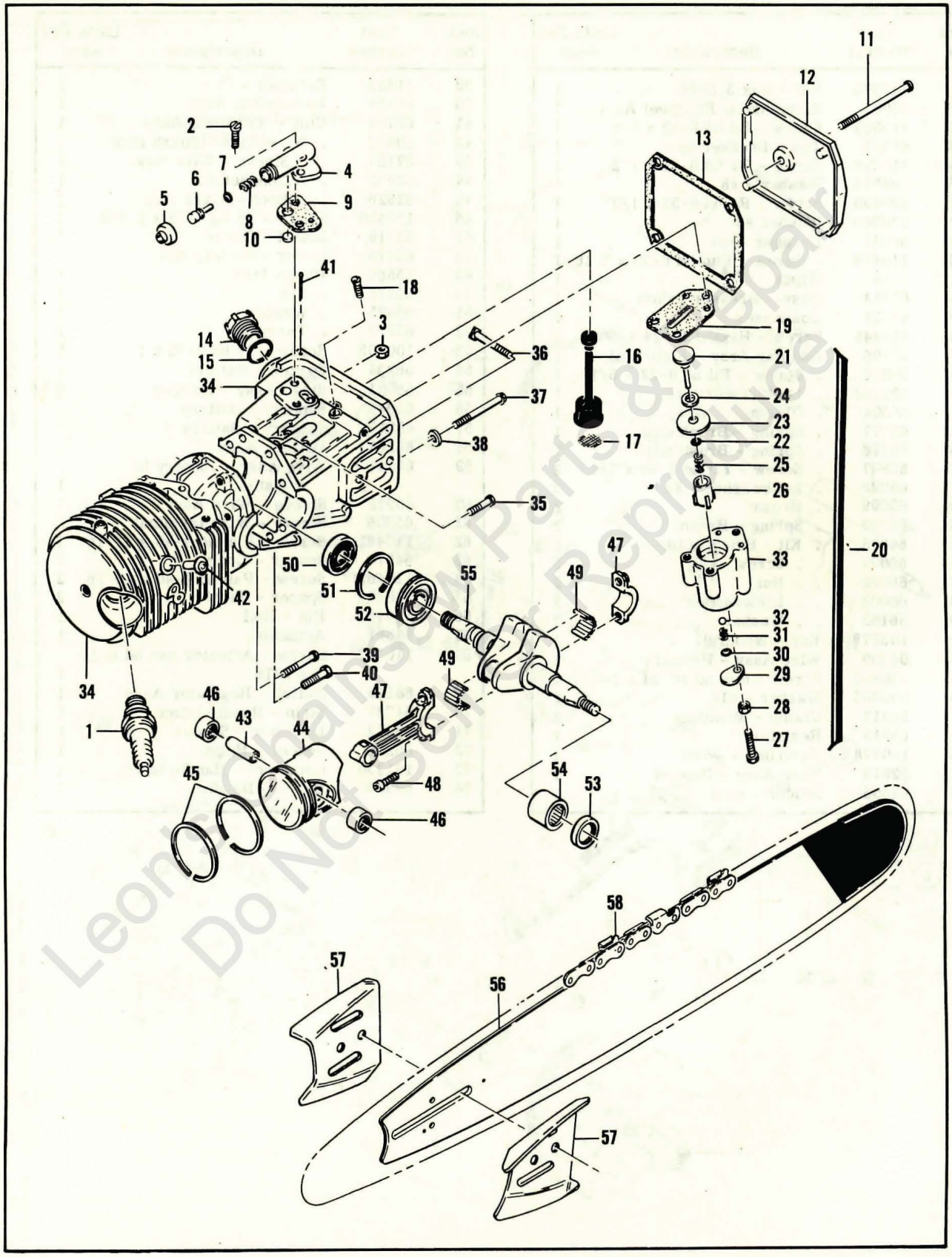

Figure 6. Powerhead Assembly

Leonard Chainsaw Parts & Repair
Do Not Sell or Reproduce

FIGURE 6. POWERHEAD ASSEMBLY

Item No.		Part Number	Description	Units Per Assy
1		63097	Spark Plug - AC CS45T	1
2	-	110623	Screw - Fil hd 8-32 x 1/2	2
3		100955	Nut - Hex 8-32	1
4		62261A	Housing - Pump	1
5		62262	Cap - Housing	1
6		62266	Plunger - Pump	1
7		101056	"O" Ring - Plunger	1
8		66687	Spring - Plunger	1
9		62230	Gasket - Pump	1
10		62909	Valve - Pump	1
11		110291	Screw - Pan hd 10-24 x 3/4	1
12		63072	Cover - Oil tank	1
13		62116	Gasket - Cover	1
14		57129A	Cap - Oil tank	1
15		101148	"O" Ring - Cap	1
16		62123B	Hose Assy - Oil	1
17		51506	Screen - Hose	1
18		110333	Screw - Oval hd 8-32 x 1/2	3
19		62274	Gasket	1
20	-	83134	Pump Assy - Pulse	1
21	-	60260A	. Piston Assy - Pump	1
22	-	104001	. "O" Ring	1
23	-	60263	. Ring - Piston	1
24	-	60937	. Washer - Teflon	1
25	-	60259	. Spring - Piston oiler	1
26	-	62227	. Sleeve - Oiler adjustment	1
27	-	110386	. Screw - Hex hd 8-32 x 1	1
28	-	100251	. Nut - Hex 8-32	1
29	-	62407	. Cover - Outlet valve	1
30	-	106104	. "O" Ring	1
31	-	62885A	. Spring - Outlet valve	1
32	-	102809	. Ball	1
33	-	83128	. Body Assy - Pump	1
34	-	83585	Crankcase Assy	1
35		110288	. Screw Assy 8-32 x 3/4	2
36		62065	. Bolt - Bar	2
37		62105	Screw Assy - Sealing	4
38		62842	. Washer - Sealing	4
39	-	110618	Screw Assy - 8-32 x 1-3/8	1
40		110288	Screw Assy - 8-32 x 3/4	1
41		100010	Pin - Cotter	1
42	-	83166	Valve - Compression release	1
43		61649	Pin - Piston	1
44	-	69212	Piston Assy	1
45		62814	. Ring Set - Piston	1
46		103512	. Bearing	2
47		65401	Connecting Rod Assy	1
48		61627A	. Screw - Skt hd 8-36 x 1/2	2
49		63225	. Roller - Needle (set of 20)	1
50		65746	Oil Seal	1
51		63464	Ring - Snap	1
52		63429B	Bearing - Ball	1
53		65747	Oil Seal	1
54		104357	Bearing - Needle	1
55		63336	Crankshaft	1
56		63541	Bar	1
57		64325	Plate - Bar Protector	2
58		62556M	Chain Assy	1

ACCESSORIES

	Part Number	Description
-	83434	Manual - Owner's
	63084	Manual - Shop
	62827	Wrench
	63341A	Kit - Spike
	66316	Kit - Wrap-around frame
	63746	Kit - Wrench
	65325	Baffle - Spark arrester
	64330	Plate Set - Bar protector (2)
	67098	Charger Assy - Battery
	63432	Spark Plug - AC CS42T

	Part Number	Description
-	69191	Kit - Pressure adapter
	65778	Spark Plug - AC CS41T
-	69210	Piston Assy 0.020 in. oversize
	62813	. Ring Set - Piston 0.020 in. oversize
	103512	. Bearing - Needle (2)
-	69211	Piston Assy - 0.030 in. oversize
	62812	. Ring Set - Piston 0.030 in. oversize
	103512	. Bearing - Needle (2)

Leon's Chainsaw Parts & Service
Do Not Sell Or Reproduce

SUPER 10-10E Chain Saw

MODEL 600012 SERIAL NUMBERS PREFIXED 11-

ILLUSTRATED PARTS LIST

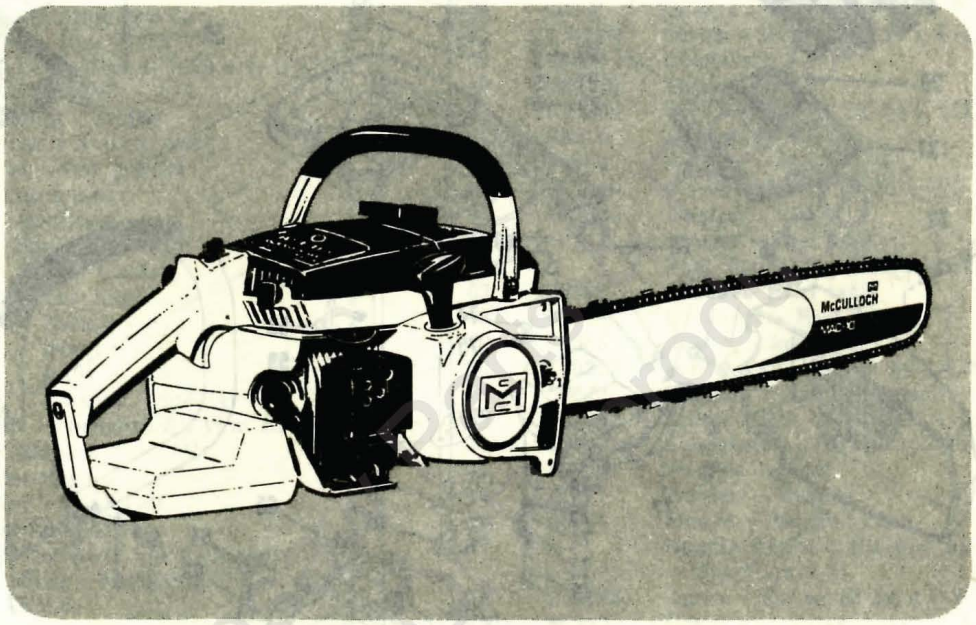

August 1969

The policy of McCulloch Corporation is one of continual improvement in design, manufacturing and engineering advancement wherever possible to assure still finer two-cycle power tools. Hence, specifications, equipment, colors, design and manufacturer's suggested list prices are subject to change without notice and McCulloch Corporation reserves the right to make such changes without prior notification or obligation to backfit or supply backfit components for units previously shipped from the factory.

	Page
Figure 1. Engine Exploded View – General	2
Figure 2. Clutch Guard & Starter Assembly	4
Figure 3. Fuel Tank Assembly	4
Figure 4. Carburetor Assembly	6
Figure 5. Electrical Components	8
Figure 6. Powerhead Assembly	10

McCULLOCH®

COPYRIGHT 1969 U.S.A. - -
McCULLOCH CORPORATION

#69914