ILLUSTRATED PARTS LIST

MODELS	SERIAL NUMBER PREFIX	MODELS	SERIAL NUMBER PREFIX
400261D	11-,12-,		
	13-,14-		
400261E	11-,12-,		
	13-,14-		

Model 7-10 power units are identified by a model number (400261) followed by a suffix letter (D, E, etc.) stamped on the identification plate attached to the saw. Suffix letters denote variations in parts or assemblies in the manufacture of the saw.

Part numbers listed in this IPL which have a suffix letter or letters following the description, indicate the part is used only on the model(s) identified by the letter or letters.

Part numbers and descriptions without suffix letter or letters apply to all models of the 7-10 power unit.

Part numbers which have one or more dots (.) preceding their description may be ordered individually but they are also included in the kit or assembly whose description begins directly above the dot(s).

The policy of McCulloch Corporation is one of continual improvement in design, manufacturing and engineering advancement wherever possible to assure still finer two-cycle power tools. Hence, specifications, equipment, colors, design and manufacturer's suggested list prices are subject to change without notice and McCulloch Corporation reserves the right to make such changes without prior notification or obligation to backfit or supply backfit components for units previously shipped from the factory.

Model 7-10 Power Unit

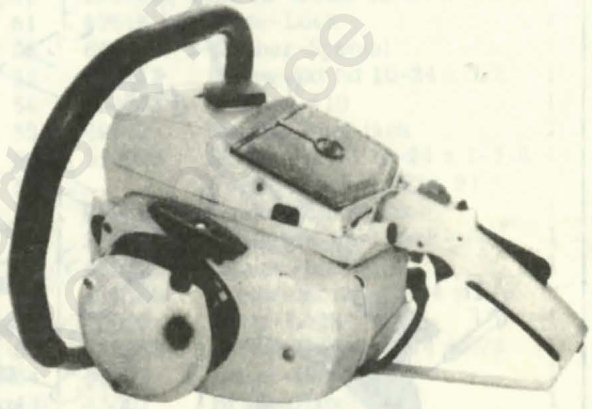

MAY 1977

- CONTENTS -

Page

Figure 1. General 2
Figure 2. Fuel Tank Assembly 4
Figure 3. Fan Housing & Starter Asys . . 4
Figure 4. Carburetor Assembly 6
Figure 5. Carburetor Assembly 6
Figure 6. Carburetor Assembly 8
Figure 7. Powerhead Assembly 10
Service Specifications 9
Accessories 9

McCULLOCH®

©U.S.A. 1977 – McCULLOCH CORPORATION

Printed in U.S.A.

92372

Model 7-10
Power Unit

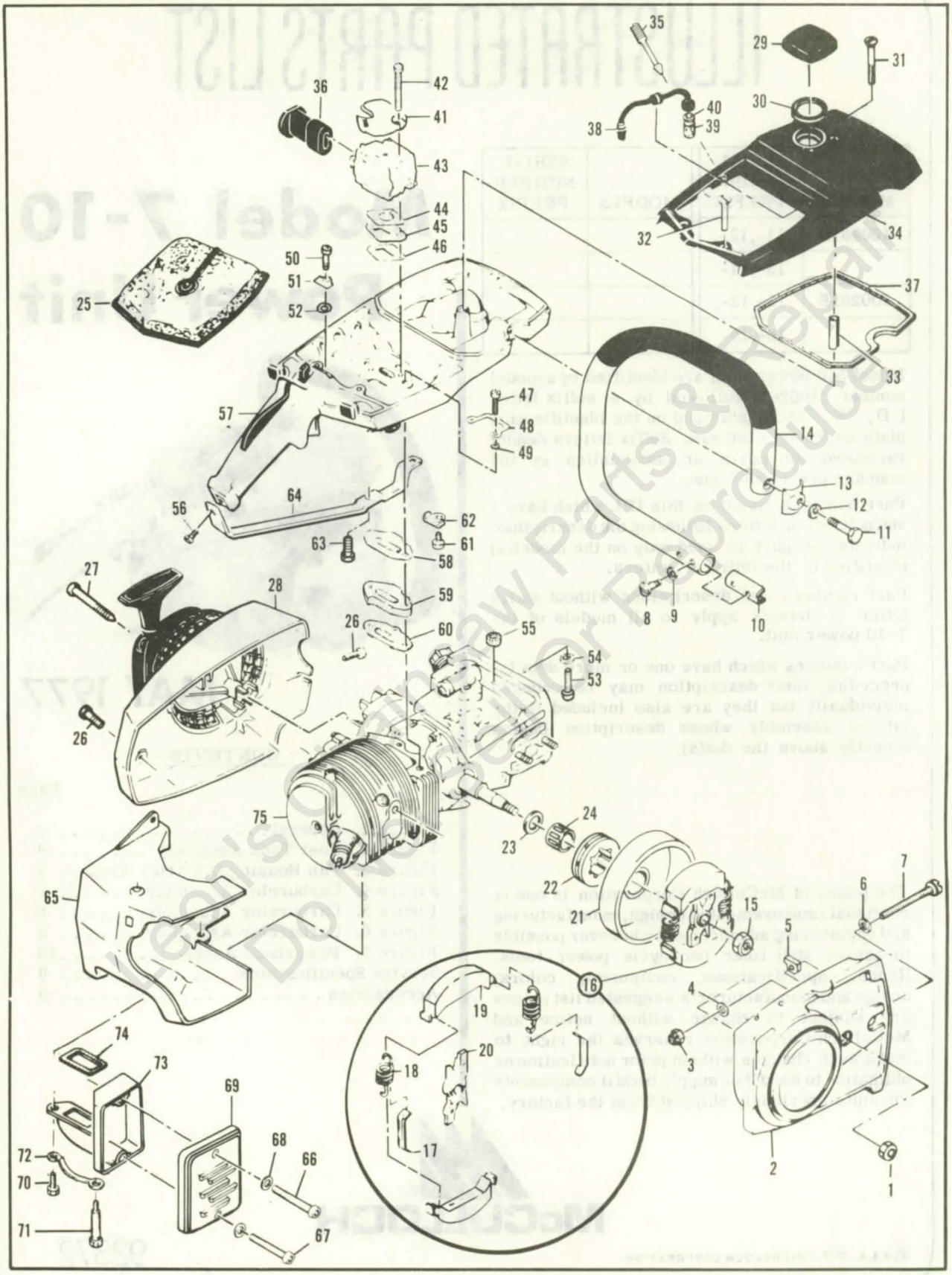

Figure 1. General

Figure 1. General

Item No.	Part Number	Description	Units Per Asy.
1	110961	Nut-Hx 5/16-24	2
2	88593	Guard Asy-Clutch (D)	1
3	102067	. Nut-Hx 10-24 (D)	1
4	100002	. Washer-#10 (D)	1
5	61705	. Nut-Bar adj. (D)	1
6	110264	. Washer-Plain (D)	1
7	102144	. Screw-Adj. (D)	1
8	110865	Screw-Hx hd 10-24 x 7/8	2
9	100352	Washer-#10	2
10	89727	Retainer-Frame	1
11	102130	Screw-Hx hd 1/4-20 x 1-1/2	1
12	100153	Washer-Lock 1/4	1
13	63484	Clamp-Frame	1
14	87686A	Frame & Grip Asy	1
15	86113	Nut-Hx 3/8-24 (L.H.)	1
16	87675	Clutch Asy	1
17	64583	. Retainer-Spring	2
18	83223	. Spring-Clutch	2
19	67233	. Shoe-Clutch	2
20	89438	. Rotor-Clutch	1
21	86945	Drum-Spkt Asy 7T .354P (E)	1
22	86950	. Sprocket-7T .354P (E)	1
23	61692	Shim-Sprocket	3
24	110971	Bearing-Sprocket	1
25	69922	Filter-Air	1
26	110741	Screw-Pan hd 10-24 x 1/2	2
27	87871	Screw-Special	3
28		Fan Housing & Starter Asy (Fig 3)	
29	89322	Cap Asy-Fuel	1
30	69767	. Gasket	1
31	110402	Screw-Oval hd 12-24 x 2-3/8	1
32	103579	Screw-Fil hd 10-24 x 1	2
33	87840	Spacer	1
34	91127	❶ Cover-Fuel tank (D)	1
(34)	69679	❶ Cover-Fuel tank (E)	1
(34)	89604	❷ Cover-Fuel tank (D)	1
(34)	88650	❷ Cover-Fuel tank (E)	1
35	87932	Screw-Idle adjust	1
36	87665	❷ Boot-Carburetor adj.	1
37	69345	Gasket-Cover	1
38	64848	Hose Asy-Fuel	1
39	63932	. Filter-Fuel	1
40	100440	. Washer	1
41	69952	Bracket-Air cleaner	1
42	103357	Bolt-Hx hd 10-24 x 2-1/4	2
43		Carburetor Asy (Fig. 4,5,6)	
44	86189	Gasket-Carburetor	1
45	84078	Spacer-Carburetor	1
46	84081	Gasket-Spacer	1
47	110567	Screw-Hx hd 12-24 x 1-1/4	2
48	68582	Plate-Lock	1
49	102115	Washer-#12	2
50	110568	Screw-Hx hd 12-24 x 1-1/8	1
51	69516	Plate-Lock	1
52	64856	Washer-Special	1
53	110713	Screw-Skt hd 10-24 x 7/8	1
54	100003	Washer-#10	1
55	69772	Spacer-Fuel tank	1
56	110910	Screw-Hx hd 10-24 x 1-3/8	1
57		Fuel Tank Asy (Fig. 2)	
58	84082	Gasket-Fuel tank	1
59	84080	Insulator-Fuel tank	1
60	68594	Gasket-Insulator	1
61	110566	Screw-Hx hd 10-24 x 5/8	1
62	68508	Plate-Lock	1
63	110682	Screw-Hx hd 10-24 x 5/8	1
64	89603	Brace-Handle (D)	1
(64)	85007	Brace-Handle (E)	1
65	89602A	Shroud (D)	1
(65)	85731A	Shroud (E)	1
66	104534	Screw-Skt hd 10-24 x 1-3/8	1
67	101563	Screw-Skt hd 10-24 x 1-1/4	1
68	24236	Washer-Special	2
69	88779	Cover-Muffler	1
70	110529	Screw-Hx hd 10-24 x 1/2	1
71	68187	Screw-Special	1
72	67922	Plate-Lock	1
73	87663	Body-Duct Asy	1
74	84007	Gasket-Spark arrester	1
75		Powerhead Asy (Fig 7)	

❶Used on models with serial number prefix 13-.
❷Used on models with serial number prefix 11-,12-,14-.

Lee's Chainsaw Parts
Do Not Sell Or Reproduce

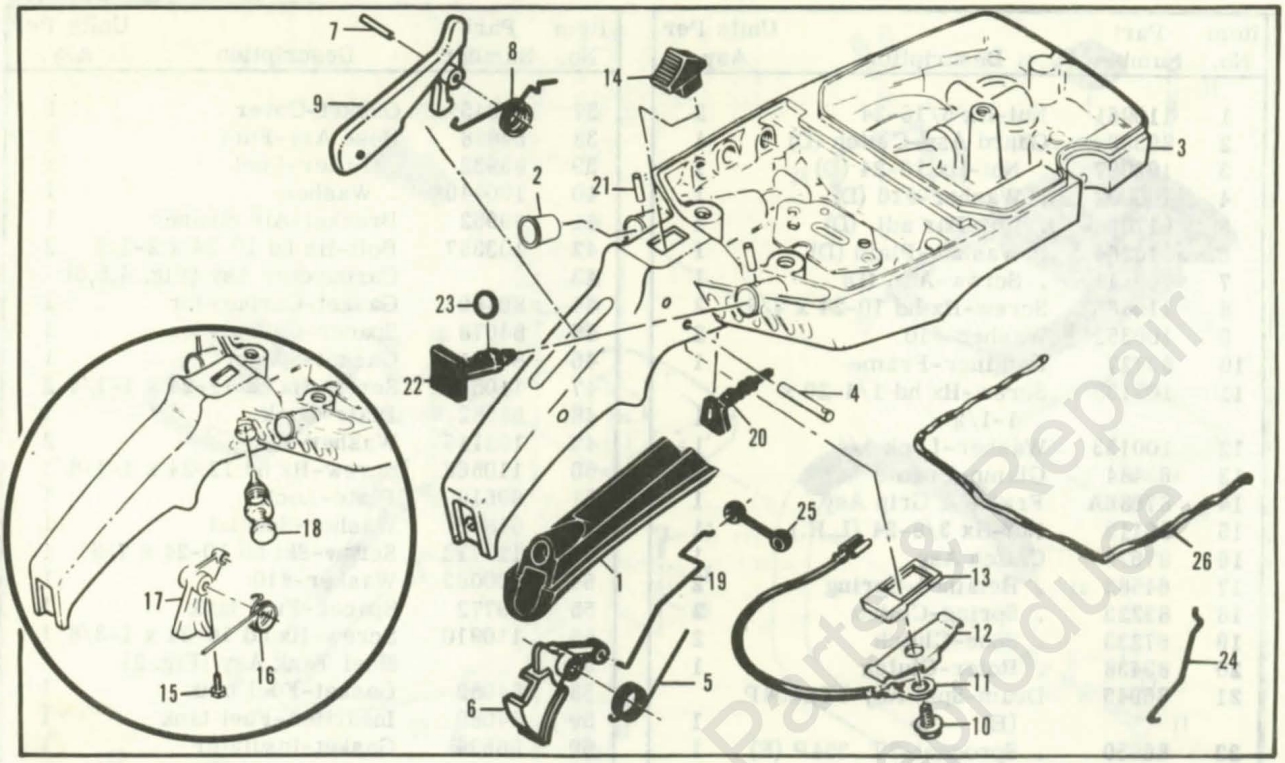

Figure 2. Fuel Tank Assembly

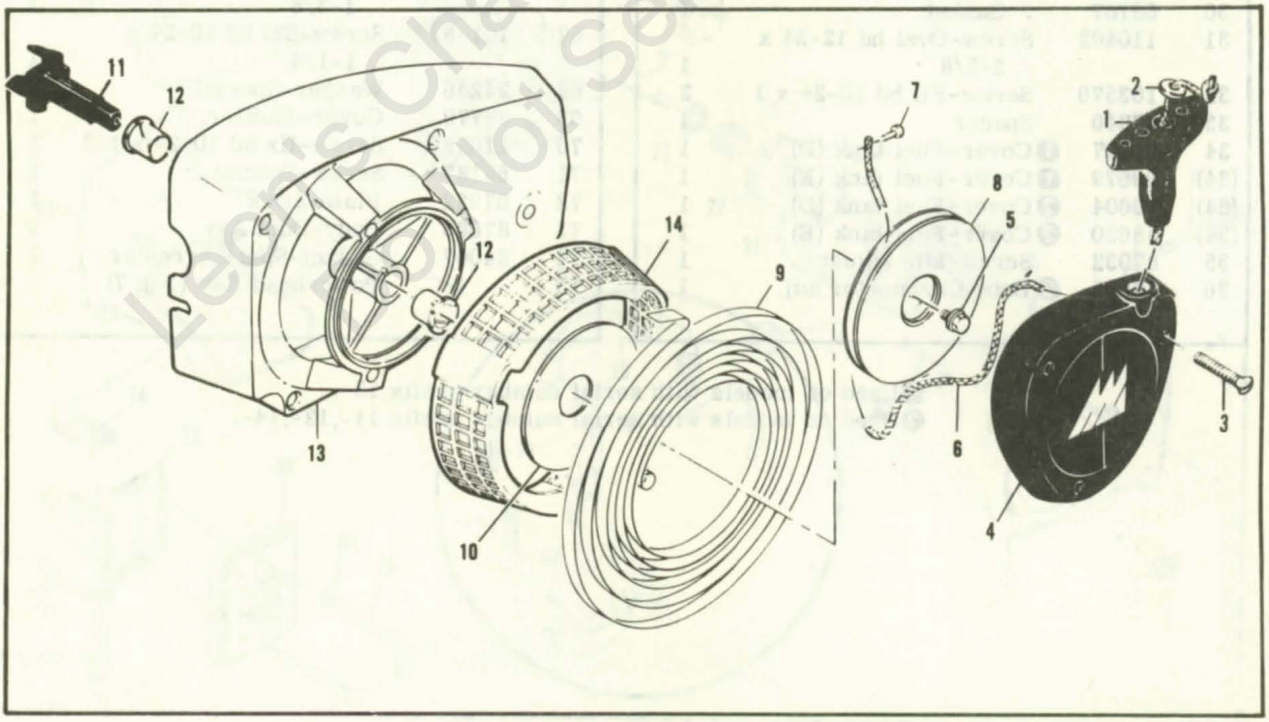

Figure 3. Fan Housing & Starter Assemblies

Leon's Chainsaw Parts & Repair
Do Not Sell Or Reproduce

Figure 2. Fuel Tank Assembly

Item No.	Part Number	Description	Units Per Asy.
1	89320	Insert-Handle grip	1
2	110893	Plug-Tapered cap	1
3	89611A	Kit-Fuel Tank/control (D)	1
(3)	84183A	Kit-Fuel Tank/control (E)	1
4	110378	❶ . Pin-Roll 3/16 x 15/16	1
5	92152	❶ . Spring-Trigger	1
6	92151	❶ . Trigger-Throttle	1
7	105654	❶ . Pin-Roll 1/8 x 7/8	1
8	92154	❶ . Spring-Trigger release	1
9	92153	❶ . Release-Trigger	1
10	110706	. Screw-Fil hd 8-18 x 1/2	1
11	62973A	. Wire Asy-Stop switch	1
12	62451	. Control-Switch	1
13	62950A	. Base-Switch	1
14	68846	. Button-Switch	1
15	110668	❷ Screw-Fil hd 8-36 x 5/8	1
16	87178	❷ Spring-Throttle return	1
17	88796	❷ Trigger	1
18	85451	❷ Latch Asy-Throttle	1
19	85107	Rod-Throttle	1
20	68522A	Seal-Throttle rod	1
21	105673	Pin-Roll 3/32 x 9/16	2
22	69041	Button-Choke	1
23	105614	"O" Ring	1
24	69042	Rod-Choke	1
25	69043	Snubber-Rod	1
26	69564	❸ Seal-Airbox	1

❶ Used on models with serial number prefix 14-.
❷ Used on models with serial number prefix 11-, 12-, 13-.
❸ Furnished on a 12-1/2 inch strip containing 9 beads (enough for 9 replacements).

Leon's Chainsaw Parts & Blades
Do Not Sell Or Reproduce

Figure 3. Fan Housing & Starter Assemblies

Item No.	Part Number	Description	Units Per Asy.
	88150	Housing Asy-Fan (D)	1
	87667	Housing Asy-Fan (E)	1
1	91255	. Kit-Starter handle	1
2	105490	. . Washer	1
3	110646	. Screw-Oval hd 8-32 x 1-1/8	3
4	88351	. Cover-Starter (D)	1
(4)	87672	. Cover-Starter (E)	1
5	110341	. Screw-Hx hd 10-24 x 1/2	1
6	68162	. Rope-Starter	1
7	110470	. Rivet-Rope	1
8	85122	. Drum-Starter	1
9	87680	. Spring-Rewind	1
10	86053	. Shield-Spring	1
11	83748	. Shaft-Starter	1
12	57535	. Bushing-Starter	2
13	87693	. Kit-Fan Housing (E)	1
14	87674	. . Guard-Sawdust	1
(13)	89605	. Housing-Fan (D)	1

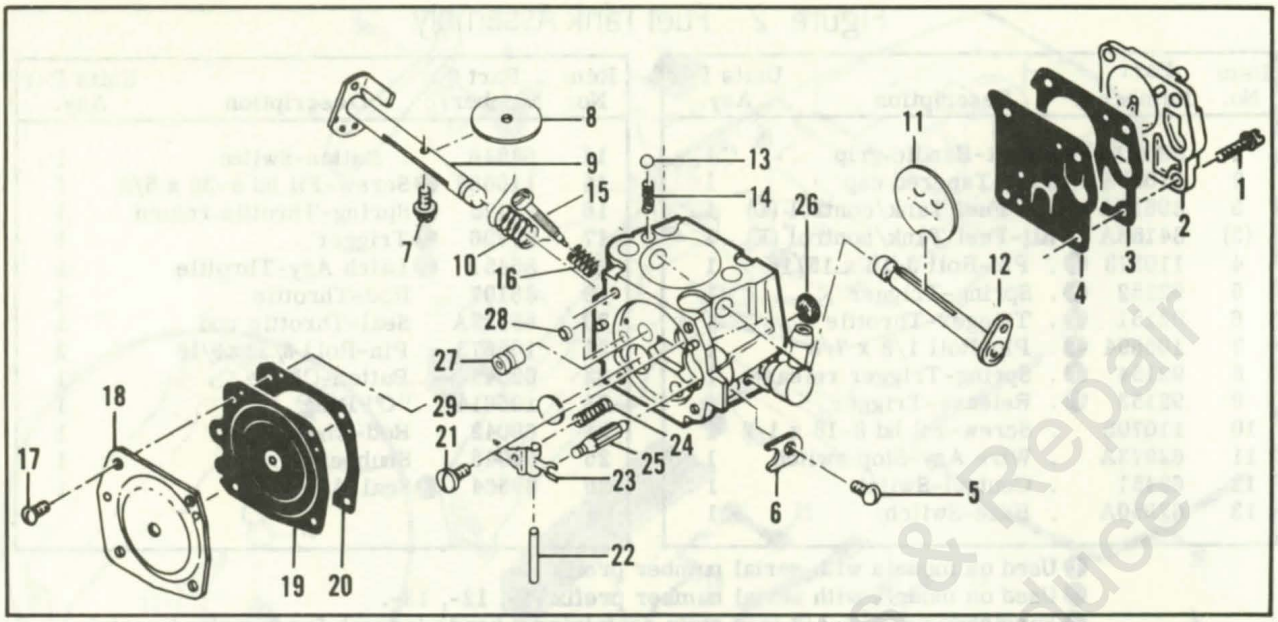

Figure 4. Carburetor Assembly

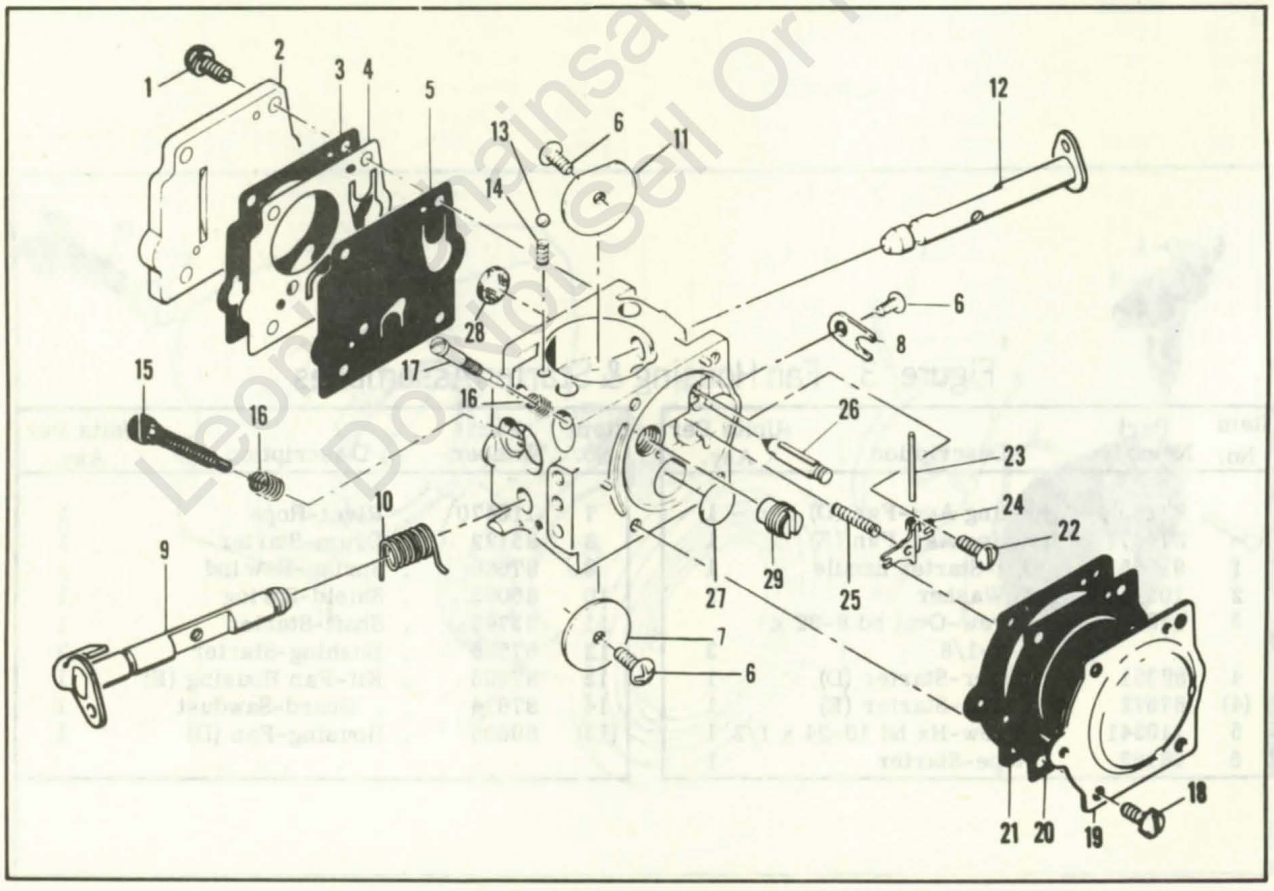

Figure 5. Carburetor Assembly

Leonard's Chainsaw Parts & Repair
Do Not Copy, Sell Or Reproduce

Figure 4. Carburetor Assembly

Item No.	Part Number	Description	Units Per Asy
	91121	❶ Carburetor Asy (HS 165A)	1
1	52933	. Screw-Pump cover	4
2	66628	. Cover-Pump	1
3	66629	❷. Gasket-Pump cover	1
4	66630	❸. Diaphragm-Fuel pump	1
5	48780	. Screw-Throttle shaft clip	1
6	66646	. Clip-Throttle shaft	1
7	48780	❹. Screw-Throttle plate	1
8	51720	. Plate-Throttle	1
9	87922	. Shaft Asy-Throttle	1
10	67136	❹. Spring-Throttle shaft	1
11	65856	. Plate-Choke	1
12	83725	. Shaft Asy-Choke	1
13	100071	. Ball-Choke friction	1
14	48759	. Spring-Choke friction	1
15	88768	. Needle-Idle mixture	1
16	66626	. Spring-Idle	1
17	51721	. Screw-Diaphragm cover	4
18	83724	. Cover-Diaphragm	1
19	66632	❸. Diaphragm-Metering	1
20	66633	❷. Gasket-Diaphragm	1
21	66644	❹. Screw-Inlet lever pin	1
22	66636	❹. Pin-Inlet lever	1
23	66638	❹. Lever-Inlet	1
24	66404	❹. Spring-Inlet lever	1
25	66637	. Needle-Inlet	1
26	66623	❹. Screen-Fuel inlet	1
27	88771	. Jet-H/S fuel (029)	1
	88772	Jet-H/S fuel (028)	Alt.
	88781	Jet-H/S fuel (027)	Alt.
28	52928	. Plug-Cup	1
29	66622	❹. Plug-Welch	1
	88774	❷ Set-Gasket	
	88776	❸ Set-Gasket & Diaphragm	
	88775	Kit-Repair	

Note: Before ordering parts, identify carburetor on saw.

❶ This is one of two carburetors used alternately on models with serial number prefix 13-.

❷ Contained in Gasket Set, P/N 88774.

❸ Contained in Gasket & Diaphragm Set, P/N 88776.

❹ Contained in Repair Kit, P/N 88775.

Figure 5. Carburetor Assembly

Item No.	Part Number	Description	Units Per Asy
	91275	❶ Carburetor Asy (SDC58)	1
1	67501	. Screw-Pump cover	4
2	88731	. Kit-Pump cover	1
3	88617	❷. . Gasket-Cover	1
4	67498	❸. Diaphragm-Check valve	1
5	83114	❸. Diaphragm-Fuel pump	1
6	47690	❸. Screw-Plate	3
7	83762	. Plate-Throttle	1
8	67489	. Clip-Shaft	1
9	67486	. Shaft Asy-Throttle	1
10	85981	. Spring-Throttle return	1
11	67490	. Plate-Choke	1
12	67488	. Shaft Asy-Choke	1
13	100302	❸. Ball-Choke friction	1
14	67504	❸. Spring-Choke friction	1
15	68106	❸. Screw-Idle speed	1
16	67502	❸. Spring-Idle	2
17	90345	. Needle-Idle mixture	1
18	70798	. Screw-Diaphragm cover	4
19	83761	. Cover-Diaphragm	1
20	67499	❸. Diaphragm-Metering	1
21	67496	❷. Gasket-Diaphragm	1
22	67500	❸. Screw-Lever pin	1
23	67508	❸. Pin-Lever	1
24	67509	❸. Lever-Inlet	1
25	67503	❸. Spring-Lever	1
26	67491	❸. Valve-Needle	1
27	71690	❸. Plug-3/8	1
28	67507	❸. Screen-Fuel	1
29	90350	. Jet-H/S fuel (28)	1
	90351	Jet-H/S fuel (26)	Alt.
	90349	Jet-H/S fuel (29)	Alt.
	88619	❷ Set-Gasket	
	88620	Kit-Repair	

Note· Before ordering parts, identify carburetor on saw.

❶ This is one of two carburetors used alternately on models with serial number prefix 13-.

❷ Contained in Gasket Set, P/N 88619.

❸ Contained in Repair Kit, P/N 88620.

Lehi Chainsaw Parts
Do Not Sell Or Reproduce

Model 7-10
Power Unit

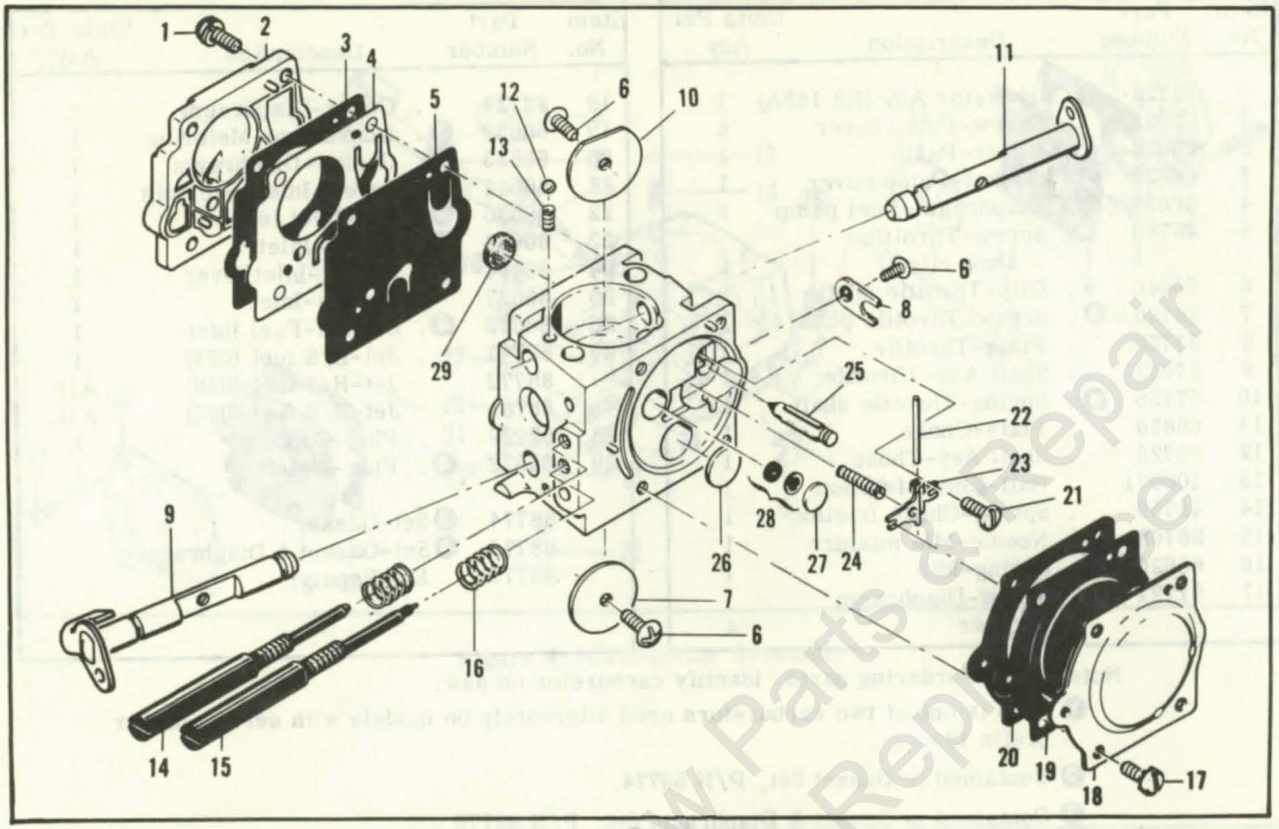

Figure 6. Carburetor Assembly

Leon's Chainsaw Parts & Repair
Do Not Sell Or Reproduce

Figure 6. Carburetor Assembly

Item No.	Part Number	Description	Units Per Asy
	87666	❶ Carburetor-Walbro SDC 44	1
1	67501	. Screw-Pump cover	4
2	83760	. Cover-Pump	1
3	67495	. Gasket-Cover	1
4	67498	. Diaphragm-Check valve	1
5	83114	. Diaphragm-Fuel pump	1
6	47690	. Screw-Plate	3
7	83762	. Plate-Throttle	1
8	67489	. Clip-Shaft	1
9	67486	. Shaft Asy-Throttle	1
10	67490	. Plate-Choke	1
11	67488	. Shaft Asy-Choke	1
12	100302	. Ball-Choke friction	1
13	67504	. Spring-Choke	1
14	87915	. Needle-High speed	1
15	87916	. Needle-Idle	1
16	67502	. Spring-Needle	2
17	70798	. Screw-Diaphragm cover	4
18	83761	. Cover-Diaphragm	1
19	67499	. Diaphragm-Metering	1
20	67496	. Gasket-Diaphragm	1
21	67500	. Screw-Lever pin	1
22	67508	. Pin-Lever	1
23	67509	. Lever-Metering	1
24	67503	. Spring-Lever	1
25	67491	. Valve-Needle	1
26	71690	. Plug-3/8	1
27	69506	. Plug-5/16	1
28	83758	. Kit-Valve & Seat Asy	1
29	67507	. Screen-Fuel	1

❶ Used on models with serial number prefix 11-,12-,14-.

Accessories

Item No.	Part Number	Description	Units Per Asy.
	62827	Wrench-Screwdriver	
	63746	Scrench	
	86419	Guide-Timing	
	69191	Kit-Pressure adaptor	
	84453	Kit-Piston tool	
	63432	Spark Plug (Standard)	
	63097	Spark Plug (Hotter)	

Service Specifications

Spark Plug Gap	-	.025 inch (.63 mm)
Lamination Gap	-	.010 to .012 inch (.25 to .30 mm)
Breaker Point Gap	-	.019 to .020 inch (.48 to .51 mm)
Timing	-	26° BTDC
Clutch Engagement Speed		2800 to 3000 R.P.M.
Torques	-	Connecting Rod Screws: 65 to 70 pound x inches (8.5 to 9.2 N.m)
		Clutch Nut: 160 to 170 pound x inches (18 to 19 N.m)
		Flywheel Nut: 265 to 325 pound x inches (30 to 37 N.m)

Leon's Chainsaw Parts & Repair
Do Not Sell or Reproduce

Model 7-10
Power Unit

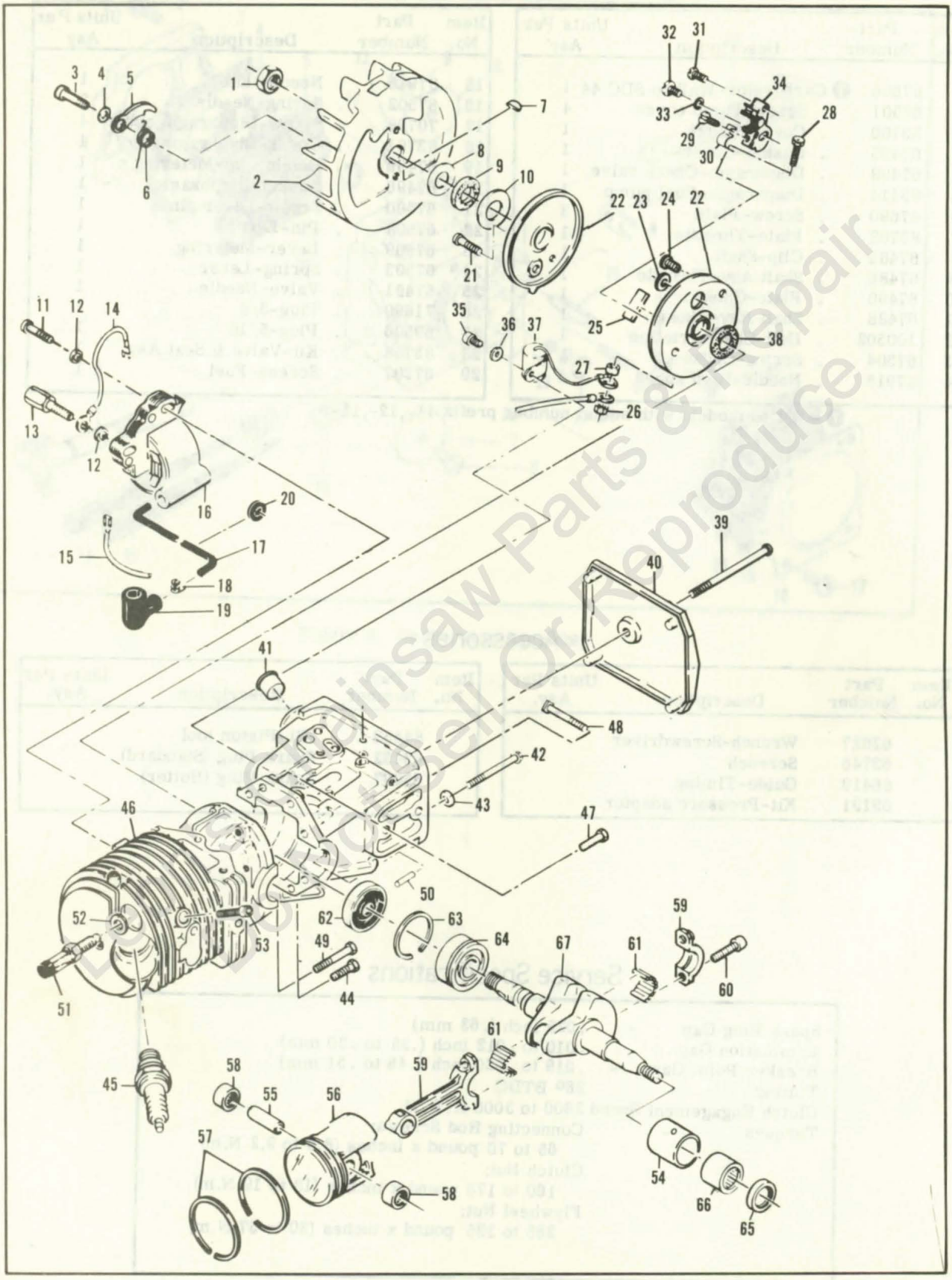

Chainsaw Parts & Repair
Do Not Sell Or Reproduce

Figure 7. Powerhead Assembly

Figure 7. Powerhead Assembly

Item No.	Part Number	Description	Units Per Asy.
1	110703	Nut-Hx 3/8-24	1
2	86068	Flywheel	1
3	88804	Screw-Pawl pivot	2
4	83241	Washer-Special	2
5	67546	Pawl-Starter	2
6	67545	Spring-Pawl	2
7	100106	Key-Woodruff	1
8	67057	Washer-Thrust	1
9	67056	Seal-Breaker box cover	1
10	67054	Washer-Thrust	1
11	110127	Screw-Hx hd 10-24 x 7/8 (SEMS)	1
12	100002	Washer-#10	2
13	83512	Stud-Special	1
14	84686	Wire Asy-Ground	1
15	69344	Wire Asy-Primary	1
16	87246A	Coil & Lamination	1
17	50120	. Wire Asy-Spark plug	1
18	55061	. . Connector	1
19	85758	. . Boot	1
20	100268	. Grommet	1
21	110584	Screw-Pan hd 8-32 x 3/4	1
22	91852	Kit-Breaker Box & Cover	1
23	91838	. Washer	1
24	110489	. Screw-Pan hd 6-32 x 7/16	1
25	54184	Wiper-Cam	1
26	100298	Nut-Hx 6-32	1
27	62365	Spacer-Breaker	1
28	110346	Screw-Hx hd 6-32 x 3/4	1
29	110706	Screw-Pan hd 8-18 x 1/2	1
30	83126	Strap-Conduction	1
31	110811	Screw-Pan hd 8-32 x 3/8	1
32	110969	Screw-Hx hd 8-32 x 1/2	1
33	105976	Washer-#8	1
34	88808	Breaker Asy	1
35	110338	Screw-Hx hd 8-32 x 1/2	1
36	100080	Washer-#8	1
37	85358	Condenser	1
38	67051	Seal-Breaker box	1
39	110291	Screw-Pan hd 10-24 x 2-5/8 (D)	1
40	83353	Cover-Oil tank (D)	1
41	110892	Cap-Dust	1
42	62105	Screw Asy-Sealing	4
43	62842	. Washer-Sealing	4
44	110288	Screw-Hx hd 8-32 x 3/4	1
45	63432	Spark Plug	1
46	89890	Crankcase Asy	1
47	110288	. Screw-Hx hd 8-32 x 3/4	2
48	62065	. Bolt-Bar mounting	2
49	110618	Screw-Hx hd 8-32 x 1-3/4	1
50	110851	Pin-Dowel	1
51	87866	Valve-DSP	1
52	85505	Washer-Valve	1
53	110681	Screw-Skt hd 10-24 x 1/4	1
54*	87152	Insert-Bearing	1
55	69020	Pin-Piston	1
56	85239	Piston Asy	1
57	89732	. Ring Set-Piston (thin)	1
58	110590	. Bearing-Needle	2
59	85352	Connecting Rod Asy	1
60	61627A	. Screw-Skt hd special	2
61	63225	. Roller-Needle (set of 20)	1
62	61618	Seal-Oil	1
63	63464	Ring-Snap	1
64	63429B	Bearing-Ball	1
65*	110260	Seal-Oil	1
66*	104357	Bearing-Needle	1
67	87699	Crankshaft	1

*These three items are contained in Needle Insert/Bearing Asy, P/N 87151.

Leons Chainsaw Parts & Repair
Do Not Sell Or Reproduce

Model 7-10
Power Unit

The McCulloch 7-10 Power Unit is sold to three manufacturers who use it to power various attachments of their own design. Individual parts of these attachments must be ordered directly from the respective manufacturer or its distributors.

The manufacturers and products which use the 7-10 Power Unit are listed below.

* Robert G. Evans Company
4330 Clary Boulevard
Kansas City, Missouri 64130
(816) 923-5040

"QUICKIE" (7-10-400261D)

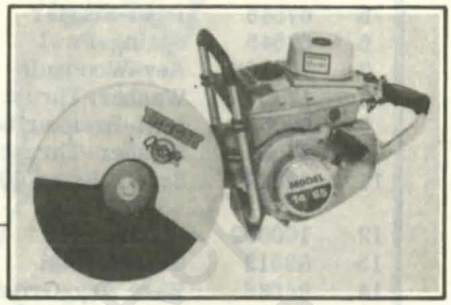

Cardinal Engineering Corp.
100 Barren Hill Road
Conshohocken, Pennsylvania 19428
(215) 825-2200

MASONRY CUTTER (7-10-400261D)

Stow Manufacturing
Brandywine Highway
Binghampton, New York 13902
(607) 723-6411

"RIPPER" (7-10-400261E)

* Robert G. Evans Co. (Target/Quickie) supplies its own Illustrated Parts List for the 7-10 Power Unit. They use McCulloch part numbers with the prefix 08. Therefore, remove the 08 prefix in order to convert an Evans part number to a McCulloch part number. EXAMPLE: R. G. Evans Frame Clamp, P/N 0851362, is McCulloch Frame Clamp, P/N 51362.

Lion's Chainsaw Parts & Pics
Do Not Sell Or Reproduce

McCULLOCH CORPORATION

McCULLOCH CORPORATION
P.O. Box 92180, Los Angeles, California 90009
International Divisions:
Los Angeles, California, P.O. Box 92181
Singapore, Goldhill Plaza, Singapore 11
Sao Paulo, Brazil, Caixa Postal 21-492

McCULLOCH OF CANADA LTD.
6338 Viscount Road, Malton, Ontario L4V 1H4, Canada
McCULLOCH OF EUROPE, N.V.
Geerdegem Schonenberg, 299 2800 Mechelen, Belgium
McCULLOCH OF AUSTRALIA PTY., LTD.
P.O. Box 223, Seven Hills, N.S.W. 2147, Australia