HOMELITE

A textron DIVISION • PORT CHESTER, NEW YORK

Leon's Chainsaw Parts & Repair
Do Not Sell or Reproduce

Part No. 23817-A
Revision 2

Printed in U.S.A.

PRICE .25

XL-12
XL-15
SUPER XL-12

PARTS LIST

Leon's Chainsaw Parts Manual
Do Not Sell or Reproduce

HOMELITE

XL

CHAIN SAWS

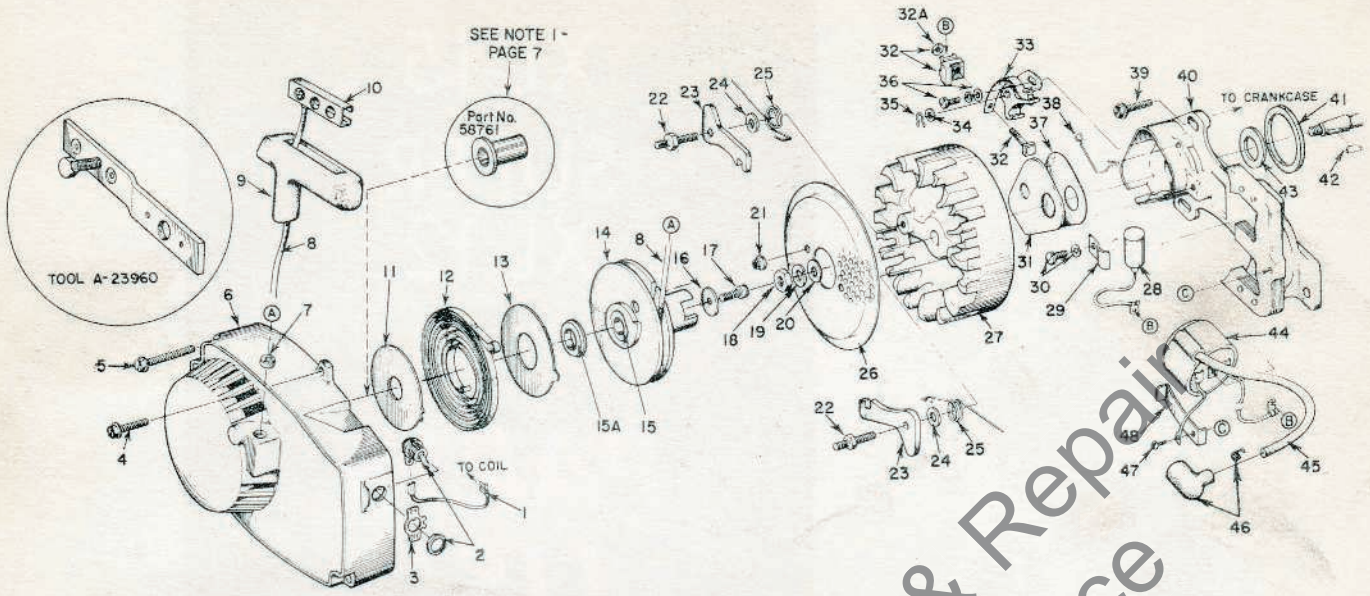

FIGURE 1

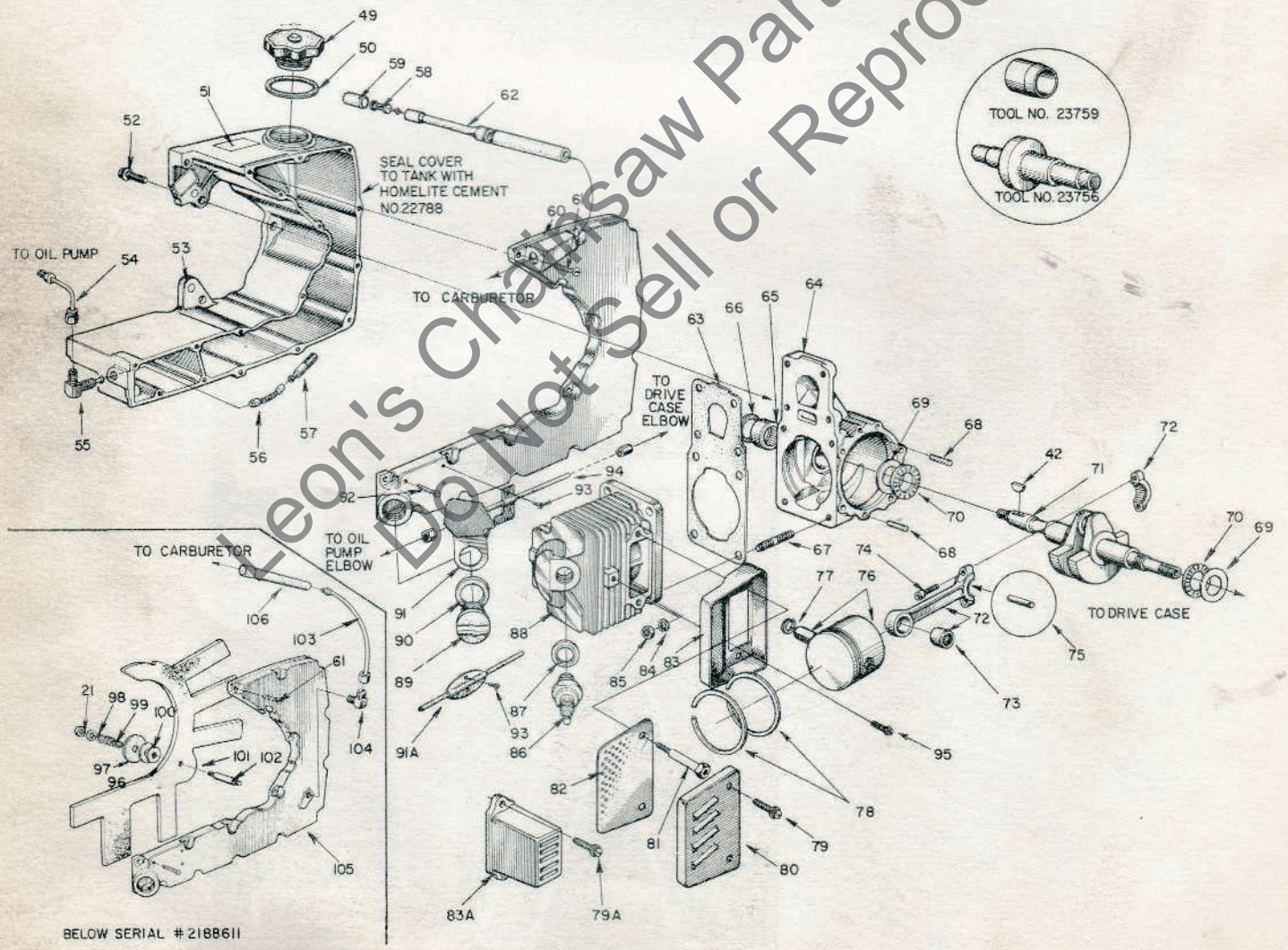

FIGURE 2

Leon's Chainsaw Parts & Repair
Do Not Sell or Reproduce

ALWAYS FURNISH MODEL AND SERIAL NUMBER WHEN ORDERING PARTS.

HOMELITE XL CHAIN SAWS

Parts used in each model are indicated by an asterisk (*) in the corresponding model column; a dagger (†) indicates an optional part available from your dealer.

Refer to NOTES, circled numerals, on page 7.

No.	Description	Part No.	XL 12	Super XL 12	XL 15	Qty.
1	LEAD - ground w/term.	A-59031	*	*	*	1
2	SWITCH - w/nut	A-57650-3	*	*	*	1
3	PLATE - "ON" - "OFF"	72085-A	*	*	*	1
4	SCREW - hex, 12-24 x 5/8	80676	*	*	*	1
5	SCREW - hex, 12-24 x 1 11/16	58963	*	*	*	3
6	HOUSING - fan ❶	A-59562	*	*	*	1
7	Includes: BUSHING - rope	59313	*	*	*	1
8	ROPE - starter	58806	*	*	*	1
9	GRIP - rope	58915	*	*	*	1
10	INSERT	58847	*	*	*	1
11	SHIELD - spring (inner) ❶	59638-A	*	*	*	1
12	SPRING - recoil	58764	*	*	*	1
13	SHIELD - spring (outer) ❶	59639-A	*	*	*	1
14	PULLEY - starter	A-64446	*	*	*	1
15	Includes: LOCK - spring	64049-A	*	*	*	1
15A	BUSHING - spring lock	64400	*	*	*	1
16	WASHER - retaining	58763	*	*	*	1
17	SCREW - hex, 10-32 x 1/2	80648	*	*	*	1
18	NUT - hex, 5/16-24	81117	*	*	*	1
19	WASHER - lock, 5/16	83002	*	*	*	1
20	WASHER - flat, 5/16	84056	*	*	*	1
21	NUT - lock, 10-32	81109-2	*	*	*	2
22	STUD - shoulder	58757-B	*	*	*	2
23	PAWL - starter	58756	*	*	*	2
24	WASHER	58851	*	*	*	2
25	SPRING - starter finger	58758	*	*	*	2
26	SCREEN - starter	58765	*	*	*	1
27	ROTOR - magneto "W"	58809	*	*	*	1
	"P"	59857	*	*	*	1
28	CONDENSER ❷ "W"	63250	*	*	*	1
	w/clamp "P"	59862	*	*	*	1
29	CLAMP - condenser "W"	59622	*	*	*	1
30	SCREW GROUP - condenser					
	"W"	30261	*	*	*	1
	"P"	57750	*	*	*	1
31	COVER - breaker box "W"	58811	*	*	*	1
	"P"	59864	*	*	*	1
32	TERMINAL BLOCK GROUP					
	"W"	A-58934	*	*	*	1
32A	NUT (only) - terminal "P"	5598[illegible]	*	*	*	1
33	POINT SET - w/felt "W"	A-58914	*	*	*	1
34	Includes: WASHER - point "W"	28028	*	*	*	1
35	CLIP - post "W"	28008	*	*	*	1
33	POINT SET w/felt and					
	terminal block "P"	A-59861	*	*	*	1
36	SCREW GROUP - points "W"	76421	*	*	*	1
	"P"	57749	*	*	*	1
37	GASKET - cover "W"	58810	*	*	*	1
	"P"	59865	*	*	*	1
38	SPRING - cover (clip) "W"	76413	*	*	*	1
	"P"	59866	*	*	*	1
39	SCREW - hex, 12-24 x 9/16	80899	*	*	*	3
40	BOX - breaker ❷ "W"	58875-A	*	*	*	1
	"P"	59859	*	*	*	1
41	GASKET	59538	*	*	*	1
42	KEY - rotor	75078	*	*	*	1
43	SEAL - felt ❷	59760	*	*	*	1
44	COIL "W"	58874	*	*	*	1
	"P"	59860	*	*	*	1
45	LEAD - hi-tension	58966	*	*	*	1
46	TERMINAL ⓫	A-33055	*	*	*	1
47	SCREW - coil clip "W"	58872	*	*	*	1
	"P"	59977	*	*	*	1
48	CLIP - coil retaining ❷ "W"	63726	*	*	*	1
	"P"	59863	*	*	*	1
49	CAP - fuel filler ❺	A-64140-A	*	*	*	1
50	Includes: GASKET	58957	*	*	*	1
51	DECAL	64144	*	*	*	1

No.	Description	Part No.	XL 12	Super XL 12	XL 15	Qty.
52	SCREW - shoulder, 1/4-20 ❸	63407	*	*	*	3
53	TANK - fuel ❸	58732-4	*	*	*	1
54	LINE - oil	A-59014	*	*	*	1
55	VALVE - check	A-59010	*	*	*	1
56	LINE - oil filter	A-59000	*	*	*	1
57	FILTER - oil	A-59009	*	*	*	1
58	FILTER ASSEMBLY	A-59251	*	*	*	1
59	Includes: FELT	59253	*	*	*	1
60	COVER - tank	63740-1	*	*	*	1
61	SCREW - rd., #6 x 1/2	80513	*	*	*	16
62	LINE - fuel, flexible	63744	*	*	*	1
63	GASKET	58513	*	*	*	1
64	CRANKCASE ❸	A-58799-C	*	*	*	1
65	Includes: BEARING	58956	*	*	*	1
66	SEAL	58688-A	*	*	*	1
67	STUD	55871	*	*	*	4
68	DOWEL - pin	63621	*	*	*	2
69	RACE - thrust bearing	58725	*	*	*	2
70	BEARING - needle thrust	58726	*	*	*	2
71	CRANKSHAFT ⓮	63497	*	*	*	1
72	ROD - connecting ⓮	A-63477	*	*	*	1
73	Includes: BEARING	58724	*	*	*	1
74	SCREW ⓮	80889	*	*	*	2
75	ROLLERS - set (31) ⓮	A-63496	*	*	*	1
76	PISTON & PIN - 1 3/4" bore ❹	A-58903-A	*		*	1
	1 13/16" bore	A-59468-A		*		1
77	Includes: RING - retaining	75120	*	*	*	1
78	PISTON RING - 1-3/4" bore	58877	*		*	2
	1-13/16" bore	59436		*		2
79	SCREW - hex, 10-32 x 9/16	80825	†	*	†	2
79A	SCREW - hex, 12-24 x 3/4	80867	*		*	2
80	CAP - muffler ❺	A-63246	†	*	†	1
81	STUD ❺	59065-A	†	*	†	2
82	BAFFLE	59050	†	*	†	1
83	BODY - muffler (3 holes) ❻	A-59049-A	†	*	†	1
	(2 holes)	A-59049	†	*	†	1
83A	MUFFLER	58584-2	*		*	1
84	WASHER - lock, 1/4	83009	*	*	*	2
85	NUT - 1/4-28	81065-2	*	*	*	2
86	SPARK PLUG ⓫	63710-S	*	*	*	1
87	Includes: GASKET	25038	*	*	*	1
88	CYLINDER - 1-3/4" bore ❼	58706-4	*		*	1
	1-13/16" bore	58706-B1		*		1
89	CAP - oil filler	A-56580	*	*	*	1
	slotted type	A-56580-1	†	†	†	1
90	Includes: GASKET	56607	*	*	*	1
91	SHIELD	59559	†	*	†	1
91A	PLATE	59016-2	*		*	1
92	PIN - cotter	86301	*	*	*	1
93	SCREW - pan, 4-40 x 3/16	80658	*	*	*	2
94	LINE - oil	A-59012	*	*	*	1
95	SCREW - pan, 12-24 x 1/2	80963	*	*	*	1
96	WASHER - felt	59457	*	*	*	1
97	WASHER - wick	58866	*	*	*	1
98	WASHER - flat, #10	84003-1	*	*	*	1
99	SPRING - compression	58867	*	*	*	1
100	GASKET	58865	*	*	*	1
101	WICK - fuel	58862	*	*	*	1
102	STUD - wick	58519	*	*	*	1
103	LINE - fuel, formed	A-59007	*	*	*	1
104	ELBOW - fuel line	58995	*	*	*	1
105	COVER - fuel tank	58739-3	*	*	*	1
106	LINE - fuel ❷	58958	*	*	*	1
	EXCHANGER - heat (not shown)	A-63442	†	†	†	1
	SUPPRESSOR - noise (not shown)	A-63080	†	†	†	1
	SPARK ARRESTOR-(not shown) ⓬	A-63500	†	†	†	1
	MUFFLER - husher (not shown)	A-64306	†	†	†	1

Ignition Type - "W" indicates Wico, "P" indicates Phelon.
DO NOT INTERCHANGE PARTS.

Leon's Chainsaw Parts & Repair
Do Not Sell or Reproduce

HOMELITE XL CHAIN SAWS

Parts used in each model are indicated by an asterisk (*) in the corresponding model column; a dagger (†) indicates an optional part available from your dealer.

Refer to NOTES, circled numerals, on page 7.

No.	Description	Part No.	XL 12	Super XL 12	XL 15	Qty.
1	GASKET	58537-A	*	*	*	2
2	SPACER - carburetor	58780	*	*	*	1
3	LINE - fuel ②	63744	*	*	*	1
4	CARBURETOR ⑧	A-58767-C	*	*	*	1
5	PIN - cotter	86324	*	*	*	1
6	ROD - choke	A-58826	*	*	*	1
7	INSTRUCTIONS	59024	*	*	*	1
8	COVER	58773-5	*	*	*	1
9	NUT - cover	A-58882	*	*	*	1
10	RING - retaining	58319-A	*	*	*	1
11	FILTER ELEMENT ⑮	63589	*	*	*	1
12	GASKET - mounting stud	58392-1	*	*	*	1
13	BRACKET - cover	A-58818-A	*	*	*	1
14	ROD - throttle	58836	*	*	*	1
15	BOOT - rod	58348	*	*	*	1
16	WASHER - lock, #10	83046	*	*	*	2
17	SCREW - hex, 10-32 x 2-1/4	80481	*	*	*	2
18	PIN - throttle lock	58924	*	*	*	1
19	SPRING - lock	58405	*	*	*	1
20	COVER - handle	A-59213	*	*	*	1
	Includes: BUSHING - pin	59064	*	*	*	1
21	SCREW - pan, 8-32 x 1/2	80560	*	*	*	2
22	RING - retaining	58409	*	*	*	1
23	TRIGGER - throttle	58859	*	*	*	1
24	SCREW - hex, 12-24 x 7/8	80891	*	*	*	5
25	GROMMET	58362	*	*	*	1
26	BUTTON	57289-1	*	*	*	2
27	VALVE - check	A-59011	*	*	*	1
28	HANDLE & HOUSING w/#12	A-59507-A	*	*	*	1
	Includes: PLUG ⑧	63303	*	*	*	1
		71505	*	*	*	1
	PIN - cotter	86301	*	*	*	1
	FELT	63290	*	*	*	1
29	GROMMET - "LO-HI"	59058	*	*	*	1
30	SPRING	59293	*	*	*	1
31	PLUNGER	A-57834-10	*	*	*	1
32	Includes: "O" RING	74388	*	*	*	1
33	"O" RING	59074	*	*	*	1
34	REED	58775	*	*	*	1
35	SPRING - reed	59053	*	*	*	1
36	STOP - reed	59421	*	*	*	1
	STOP - reed	58776	*	*	*	1
37	SCREW - pan, 4-40 x 3/16	80658	*	*	*	2
38	SCREW - idle 5/16-18 ⑧	63302	*	*	*	1
38A	10-32	59310	*	*	*	1
39	SPRING ⑧	59319	*	*	*	1

No.	Description	Part No.	XL 12	Super XL 12	XL 15	Qty.
40	SCREW - hex, 12-24 x 3/4	80867	*	*	*	6
41	BUMPER	58961	†	†	*	1
42	SCREW - socket, 1/4-20 x 1	80428	*	*	*	1
43	HANDLE BAR	A-58793	*	*	*	1
44	NUT - 12-24	81068	*	*	*	2
45	WASHER - lock, #12	83056	*	*	*	2
46	FITTING - oil	56707	*	*	*	1
47	GASKET ⑨	63355	*	*	*	1
48	DRIVE CASE	A-58929-A	*	*	*	1
49	Includes: SEAL	58688-A	*	*	*	1
50	BEARING	58966	*	*	*	1
51	BOLT - guide bar	58753	*	*	*	2
52	SCREW - pin, 1/4-20 x 2	80885	*	*	*	1
53	PIN - bar adjusting	58783-1	*	*	*	1
54	NUT - lock, 1/4-20	81108	*	*	*	1
55	SCREW - hex, 12-24 x 9/16	80899	*	*	*	5
56	COVER - clutch ⑬	63051-1	*	*	*	1
57	SHOE - clutch ⑬	63052	*	*	*	3
58	BACK PLATE ⑬	63053-1	*	*	*	1
59	SPRING - clutch ⑬	63034	*	*	*	3
60	BRACKET - handle ⑩	59246-3	*	*	*	1
61	PLATE - inner guide bar	58781	*	*	*	1
62	PLATE - outer guide bar	58782	*	*	*	1
63	WASHER - flat, 5/16	84056	*	*	*	2
64	NUT - 5/16-18	81196	*	*	*	2
	DIRECT DRIVE MODELS					
65	COVER - drive case	58750-2	*	*		1
66	NUT - 3/8-24	81192	*	*		1
67	WASHER - flat, 3/8	84010-1	*	*		1
68	WASHER - thrust, (outer)	58926	*	*		1
69	SPROCKET & DRUM ⑩					
	standard - 3/8" pitch, 7 tooth	A-59552	*	*		1
	optional - 3/8" pitch, 8 tooth	A-63346	†	†		1
	.404 pitch, 7 tooth	A-59555	†	†		1
70	Includes: BEARING - needle	72311	*	*		1
	New "splined" type (not shown)					
	DRUM & HUB - sprocket	A-63288	†	†		1
	Includes: BEARING - needle	72311	*	*		1
	SPROCKET - "splined"					
	rim type - 3/8" pitch, 7 tooth	63284	†	†		1
	.404 pitch, 7 tooth	63285	†	†		1
	1/2" pitch, 7 tooth	63287	†	†		1
71	RACE - inner ⑩	55584	*	*		1
72	WASHER - thrust (inner)	58833	*	*		1
73	COVER - clutch ⑬	58751	*	*	*	1
74	SHOE - clutch ⑬	58928-1	*	*		3
					*	6
75	SPIDER - clutch ⑬	58927-1	*	*	*	1
76	SPRING - clutch ⑬	55123-C	*	*	*	2

Service replacement carburetor #A-58767-C supplied with idle stop screw and spring (used in units with internal adjustment); remove these when using index #39, or index #39A with #40.

Refer to Carburetor Parts List #23766-C.
Use Repair Parts Kit #58972, Gasket Set #58971.

SPECIAL TOOLS (available on order)

Part No.	Description
A-23937	COMBINATION WRENCH ⑪
A-22808	COMBINATION WRENCH ⑪
22828	PLIERS - piston snap ring
23528	WRENCH - socket screw (conn. rod)
23756	BEARING ASSEMBLY AND DISASSEMBLY - conn. rod
23757	BEARING ASSEMBLY AND DISASSEMBLY - drive and crank cases
23819	PLUG - needle bearing (sprocket)
-----	BEARING PULLER - clutch drum (#A-78 Snap-On or equivalent)
23758	SEAL ASSEMBLY - drive and crank cases
23759	SLEEVE - crankshaft assembly
A-23949	PLUG - piston pin removal
23760	BEARING ASSEMBLY AND DISASSEMBLY - sprocket drum - sleeve bearing
23800	TOOL - seal assembly (crank and drive cases)
A-23960	REMOVER AND LOCKING BRACKET - rotor
A-23696	REMOVER - threaded spider ⑬ GEAR DRIVE MODELS
23665	PLIERS - planetary snap ring
23772	BEARING ASSEMBLY & DISASSEMBLY - planetary follower
A-23792	SPROCKET HOLDER
23773	BEARING ASSEMBLY - clutch drum
A-23934	CLUTCH SPANNER WRENCH ⑬

PAINT

23318	SPRAY CAN - blue
22771	SPRAY CAN - red
23343	SPRAY CAN - green
23560	SPRAY CAN - white

Leon's Chainsaw Parts & Repair
Do Not Sell or Reproduce

ALWAYS FURNISH MODEL AND SERIAL NUMBER WHEN ORDERING PARTS.

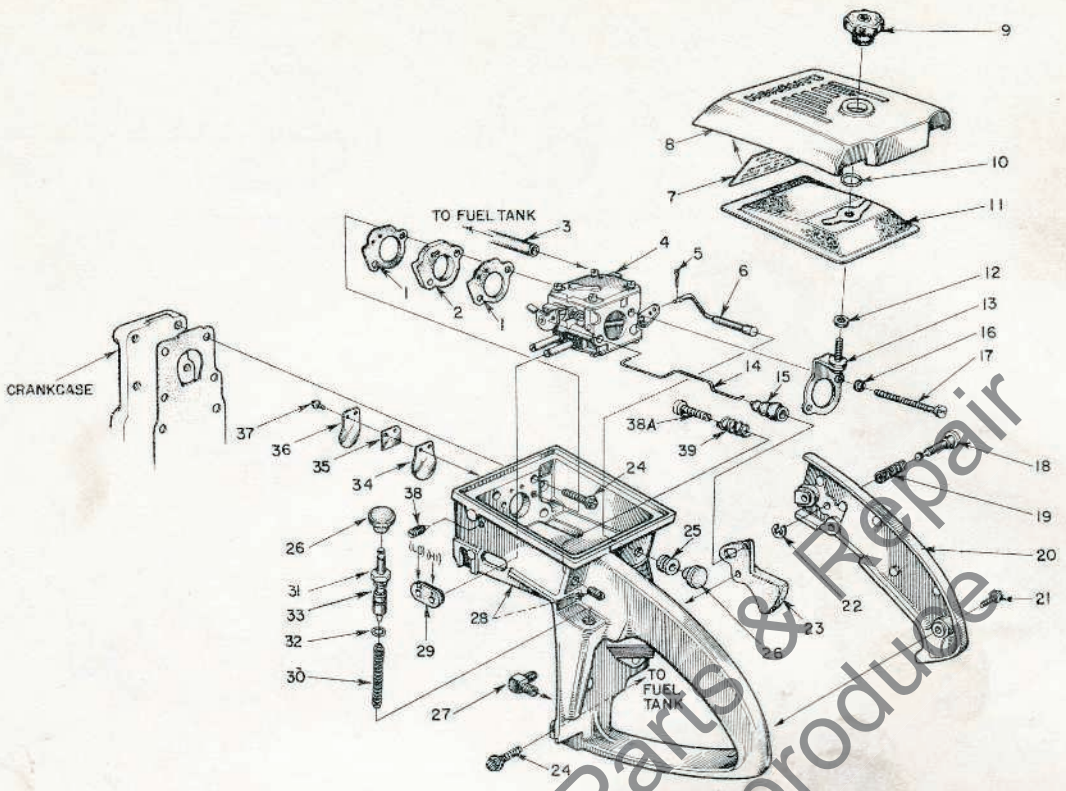

FIGURE 3

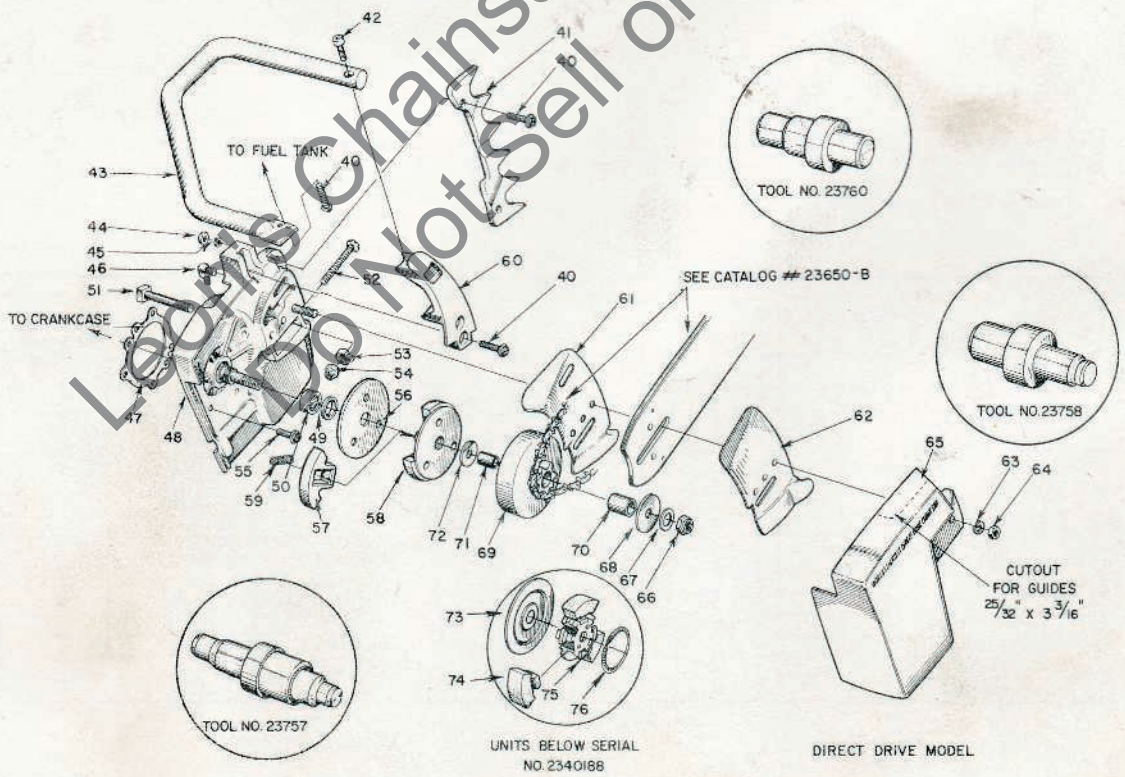

FIGURE 4

Leon's Chainsaw Parts & Repair
Do Not Sell or Reproduce

HOMELITE XL CHAIN SAWS

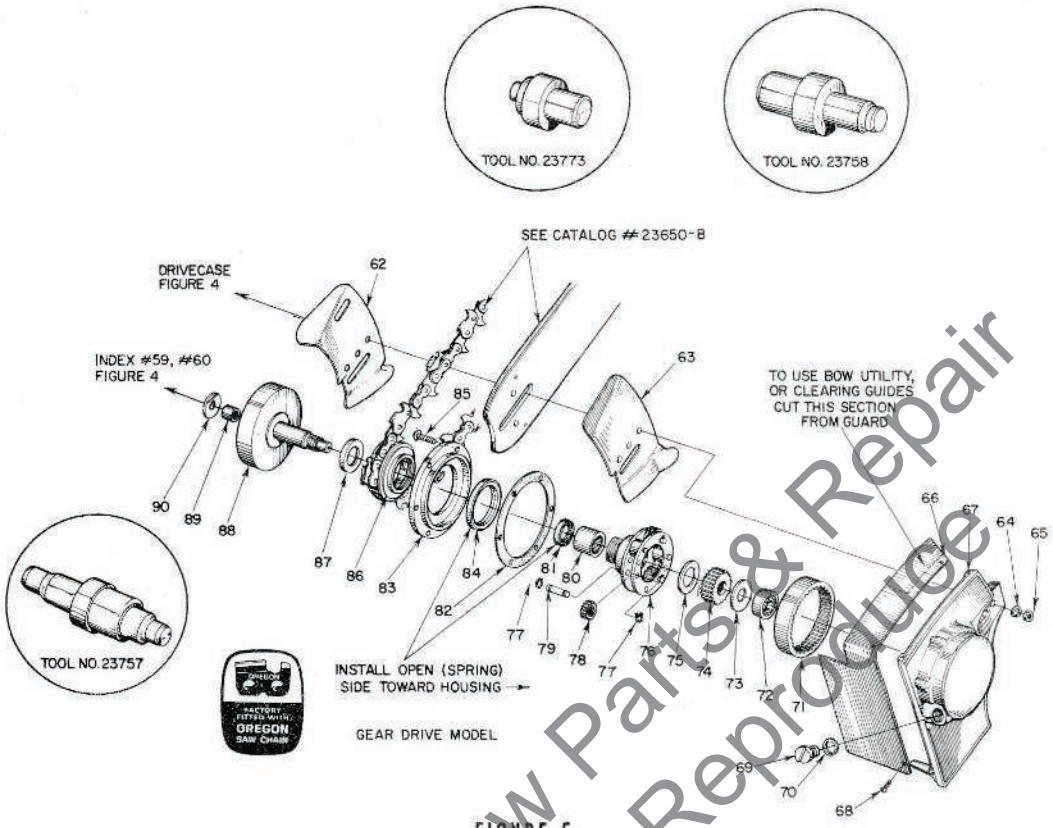

FIGURE 5

Parts used in each model are indicated by an asterisk (*) in the corresponding model column; a dagger (†) indicates an optional part available from your dealer.

Refer to NOTES, see below.

No.	Description	Part No.	XL 12	Super XL 12	XL 15	Qty.
62	PLATE - inner guide bar	58781	*	*	*	1
63	PLATE - outer guide bar	58782	*	*	*	1
64	WASHER - lock, 5/16	83002	*	*	*	2
65	NUT - 5/16-18	81196	*	*	*	2
	GEAR DRIVE MODEL					
66	GUARD - chain	59071			*	1
67	HOUSING - gear w/pins	A-59078-3			*	1
68	SCREW - pan, 10-32 x 3/8	80579			*	3
69	CAP - oil filler	58482			*	1
70	GASKET	55107			*	1
71	GEAR - ring	58107			*	1
72	BEARING - ball	58120-S			*	1
73	WASHER - thrust	58118-A			*	as req'd.
74	GEAR - sun	58109-1A			*	1
75	WASHER - thrust	59081			*	1
76	CARRIER - planet	A-59083			*	1

No.	Description	Part No.	XL 12	Super XL 12	XL 15	Qty.
77	RING - retaining	29270			*	6
78	GEAR -planet w/bearing	A-59062			*	3
79	SHAFT - gear	58953-A			*	3
80	BEARING - needle	58952			*	1
81	SEAL	56134-1			*	1
82	GASKET	58947			*	1
83	COVER - gear housing	A-59085			*	1
84	Includes: SEAL	58126			*	1
85	SCREW - pan, 6-32 x 1/2	80630			*	6
86	SPROCKET					
	standard, 3/8" pitch, 8 tooth	A-59021			*	1
	optional, .404 pitch, 8 tooth	A-59297			†	1
87	WASHER - thrust	58949			*	1
88	SHAFT - drive w/drum	A-58955			*	1
89	BEARING - needle	58951			*	1
90	WASHER - thrust	59219			*	1

Leon's Chainsaw Parts & Repair
Do Not Sell or Reproduce

ALWAYS FURNISH MODEL AND SERIAL NUMBER WHEN ORDERING PARTS.

NOTES

❶ HOUSING - #A-59562 supersedes #A-59290 which superseded #A-58803-1, see BSM #495 CS. Later housings do not use #58761 flanged bushing (see inset, Fig. 1).
SHIELD - #59638-A and #59639-A used with later housings, do not use in #A-58803-1 Housing with removable flanged bushing (#58761).

❷ CONDENSER - #63250 supersedes #58817 in WICO ("W") system.
LINE - #58958 (with carburetor end expanded) supersedes #58997 in units below serial #2188611.
BOX - #58875-A (with recess in crankcase side) supersedes #58875, recess accomodates felt seal.
SEAL - #59760 used only in #58875-A Box.
CLIP - 63726 supersedes 58873 in the "Wico" (W) system.

❸ SCREW (shoulder) #63407 requires 1/4" holes in fuel tank ("F" drill), and 1/4-20 tapped holes in crankcase. Screw #80867 used to mount early tanks (3/16" holes) to early crankcase with 12-24 threads. See TANK, CRANKCASE.
TANK (service replacement) has 1/4" mounting holes, requires three 1/4-20 x 3/4 screws (#63407) and mating 1/4-20 tapped holes in crankcase. See SCREW, CRANKCASE.
CRANKCASE (service replacement) has three 1/4-20 tapped holes for tank mounting screws. Early crankcase with with 12-24 threads may be tapped out. See SCREW, TANK.
CAP, FUEL FILLER - A-64140-A supersedes A-59956 with 56865 Valve.

❹ PISTON & PIN - #A-58903-A or #A-59468-A uses one retaining ring (#84), early Piston & Pin requires two rings (#84).

❺ CAP - #A-63246, (with reinforcing plate inside) supersedes #59051, requires #59065-A Stud (1/16" shorter).
STUD - #59065-A used with #A-63246 Cap, #59065 used with #59051 Cap.

❻ Body #A-59049-A requires cylinder with 3 mounting holes (#58706-B1); #A-59049 still required on cylinder with 2 mounting holes. See ❼.

❼ Service replacement Cylinder #58706-B or #58706-B1 has 3 muffler mounting holes. #A-59049-A Body recommended. #A-59049 can be used. See ❻.

❽ CARBURETOR - #A-58767-C supersedes #A-58767-B, #A-58767-A, and #A-58767; supplied with idle stop screw and spring (internal idle adjustment), remove these parts when using either index #38, or #38A with #39.
PLUG - #63303 (5/16-18) plugs tapped hole for index #38, #71505 (10-32) plugs hole for index #38A.
SCREW - #63302 used with #A-58767-C carburetor only. #59310 requires spring #59319.
SPRING - #59319 required with #59310 screw.

❾ GASKET - #63355 supersedes "O" Ring.

❿ BRACKET - #59246 supersedes #58786
SPROCKET & DRUM - #A-59552 (with needle bearing) supersedes #A-58797 (with sleeve bearing), see RACE. #A-59555 (with needle bearing) supersedes #A-59309 (with sleeve bearing), see RACE.
BEARING - #72311 needle bearing required with #A-59552 and #A-59555 Sprocket & Drum, see RACE. #58784 sleeve bearing required with #A-58797 and #A-59309 Sprocket & Drum, see RACE.
RACE - #58584 required with #72311 needle bearing. #58785 required with #58784 sleeve bearing.

⓫ SPARK PLUG - 63710-S (CJ-8) Plug available only with standard Electrodes - use A-33055 Terminal. 58917-S (TJ-8J) Plug and 59558-S (UTJ-11P) Plug with Platinum Electrodes use 58918 Cover and 58919 Spring.
COMBINATION WRENCH - A-23937 Wrench is used with 63710-S Plug. A-22808 is used with 58917-S and 59558-S Plugs.

⓬ SPARK ARRESTOR - When A-63500 is used with A-63080 Noise Suppressor use 63503-1 Stud Shim (.060), without A-63080 use 63503 Stud Shim (.030).

⓭ CLUTCH ASSY. - For units below serial #2340188 order parts as illustrated or Convert Clutch Assy. by ordering A-63608 Clutch and Cover Assy. A-23696 Remover used on units below serial #2340188, A-23934 used for later units.

⓮ CRANKSHAFT - Units below serial #2079523 use #58439.
CONNECTING ROD - Units below serial #2079523 use #A-58769.
ROLLERS, SET - Units below serial #2079523 use #A-58864 (28 Rollers per set.)

⓯ FILTER ELEMENT - #63589 supersedes 58774-1. Part #58884 Gasket still available for 58774-1 Filter.

Leon's Chainsaw Parts & Repair
Do Not Sell or Reproduce