TECHNICAL BULLETIN INDEX

BULLETIN NO.	UNIT	SUBJECT
183-001	410	Matched Cylinders and Piston (A-95060)
183-002	Saw Chain	1. 1/2 Inch Pitch Saw Chain 2. Identifying Saw Chain
183-003	Most Chain Saws	Replacement Sprockets for Power Tip & Sprocket Nose Guide Bars
183-004	330	Routing Switch Wires
183-005	Guide Bars	Incorrect Sprockets in Power Tip Guide Bars
183-006	ST-80, ST-100, ST-120	Product Improvements for 1983
183-007	ST-200	Product Improvements for 1983
183-008	XL Family, ST Family HB Blowers, P-100 pumps	Pistons Without a Piston Ring Stop Pin
183-009	ST-80, ST-100, ST-120	Fuel Shut Off Valve A-97117
183-010	360-AO	Change of Spark Plug Type
183-011	Clutches	Packaging Error
183-012	360, 550, 750, DM-50 & DM50-1	Ignition Test
183-013	ST-80, ST-100, ST-120	Incorrect Throttle Cable Adjustment
183-014		NO BULLETIN ISSUED
183-015	410	Muffler Cap 93348-1A
183-016	245	Manual Oil Pump Will Not Work

Courtesy of undee70ss
Do Not Sell or Reproduce

BULLETIN NO.	UNIT	SUBJECT
183-017	ST-80, ST-100, ST-120, ST-200, HB280, HB480, HB680	New Thrust Washers
183-018	SEZ-AO	New Muffler Spacers
183-019	U-Haul	U-Haul Rental Saw (UT 10645)
183-020	410	Service Pistons
183-021	SEZ-AO	Magnesium Starter Housing A-65222-1
183-022	410	Improved Model
283-001	HB-680	Fluid Control Valve A-95766
283-002	VCH-178, VCH-250	Plugs & Plug Covers
283-003	PCA 20	Service Engine
184-001	240	Worn Carburetor Inlet Needle Levers
184-002	All Models	Obsolete Units Last Year Built
184-003	Gas String Trimmers	Consolidating String Head Assemblies
184-004	410	New Fuel & Oil Caps
184-005	XL-100 Series	Replacement Carburetor
184-006	Gas String Trimmers	1. Slider & Spring Kits 2. Trimmer Kit for ST-210
184-007	All Units	Diaphragm Carburetors Returned Under Warranty
184-008	ST-80, ST-100, ST-120	Rope Bushing and Guide Kit (A-97796)

Courtesy of undee70ss
Do Not Sell or Reproduce

BULLETIN NO.	UNIT	SUBJECT
184-009	330, XL-12, SXL-AO, 240, 245, XL, XL-2, Super 2, VI Super 2, ST-200	Proper Clutch Installation
184-010	ST-160, ST-180	Special Carburetor Adjustment Procedure
184-011	ST-160, ST-180, ST-200	Ceramic Fuel Filter (96639) Examination
184-012	ST-160, ST-180	Hard Starting When Cold
184-013	Tillotson Carburetors	Incorrect Non-Captive Metering Diaphragm
184-014	ST-160, ST-180	1. Addition of Shield (94409) & Washer (84099) to Lower Head Housing Assembly 2. Drive Shaft Tube Length 3. Parts List Corrections
184-015	All Units	Ignition Modules Returned Under Warranty
184-016	Tools & Accessories	1. Carburetor Repair Tool Kit (17789) 2. Replacement Grinding Wheels for K-245 Grinders
184-017	Various Units	1. Cylinder Nut (96212) & Lockwasher (83061) 2. Service Bulletin Revision (184-005) 3. Parts List Correction (17368-A) 4. Parts List Correction (24831 Rev. 3)
284-001	XL98A	Cylinder A-48807 and Rings 55537
284-002	Pump Accessories	Gaskets for Quick Disconnect Couplings
284-003	XL98A	Correction to Parts List 24760 Rev. 2
284-004	XL98A	Wheel Turning at Idle, New Pulley Inner Race
284-005	HB280, HB480, HB680	Fuel Tank Kit (p/n A-97931)

Courtesy of under70ss
Do Not Sell or Reproduce

HOMELITE
TEXTRON
Homelite Division of Textron Inc.

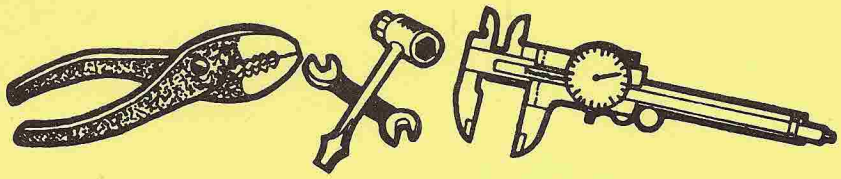

TECHNICAL SERVICE BULLETIN

NO. 183-001

SUBJECT: MATCHED CYLINDERS AND PISTON (A95060)

AFFECTS: MODEL 410 CHAIN SAW

In the future, cylinders and pistons for the model 410 engine will be supplied as a matched set only.

After you use up your stock of A93442 cylinders and A93443 pistons, order only matched set A95060.

The latest parts list for the model 410 (17598, Rev. I) shows the matched set as item 25 in figure 3. Item 26, retaining ring, item 27, piston ring and item 28, gasket, are included in the cylinder and piston matched set but may also be ordered separately.

Any orders for individual pistons or for individual cylinders will be filled by supplying the matched set.

Courtesy of unLe70ss
Do Not Sell or Reproduce

Eddie Turner
Service Manager
Forestry Products

bh

DATE 1/83

HOMELITE
TEXTRON
Homelite Division of Textron Inc

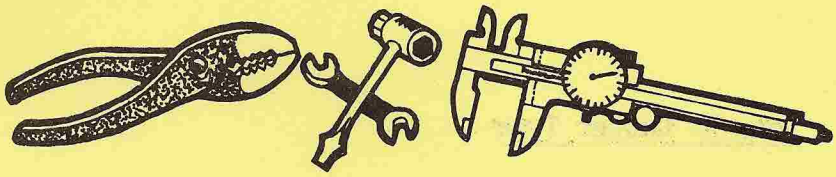

TECHNICAL SERVICE BULLETIN

NO. 183-002

SUBJECT: 1. 1/2 INCH PITCH SAW CHAIN
2. IDENTIFYING SAW CHAIN

AFFECTS: HOMELITE SAW CHAIN

1. Due to a steadily decreasing demand Homelite will no longer supply 1/2 inch pitch saw chain. A small quantity of chain and repair kits are available at this time. However, supplies are limited and no more will be made available.

2. Because of the many types of chain now available, we feel dealers should be familiar with our catalog numbering system. This system identifies each loop, reel or repair kit.

Example:

38	C	P	50	60	CN

Chain pitch (Note A)
Cutter type (Note B)
Safety Links (Note C)
May be a 3rd letter (Note D)
Gauge or width of drive link (Note E)
Drive link count (Note F)
Miscellaneous information (Note G)

Note A Chain Pitch

25	=	1/4"
32	=	.325"
37	=	3/8" Pro-cut
R37	=	3/8" Pro-cut
R375	=	3/8" Pro-cut
375	=	3/8" Pro-cut
38	=	3/8" Standard
40	=	.404
50	=	1/2"

Continued

DATE 1/83

Courtesy of unclee7055
Do Not Sell or Reproduce

Note B Cutter Type

C = Chipper
M = Micro chisel or semi-chisel
AL = Super chisel (square)
L = Super chisel (round)
T = Self sharpening

Note C Safety Links

P = Drive link safety
S = Tie strap safety
D = Dual depth gauge
E = Triple depth gauge

Note D Tooth Pattern

- = Full complement (no designation)
J = Skip
K = Semi-skip

Definitions of tooth patterns:

1. Full complement = cutter, tie strap, cutter, tie strap, etc.
2. Skip = cutter, 2 tie straps, cutter, 2 tie straps, etc.
3. Semi skip = cutter, tie strap, cutter, 2 tie straps, cutter, tie strap, cutter, 2 tie straps, etc.

Note E Gauge (Thickness of Drive Link)

50 = .050 (No dot on drive link)
58 = .058 (One dot on drive link)
63 = .063 (Two dots on drive link)

Note F Chain Length, Drive Link Count or Description

7 = Repair kit
8 = Joining kits
26-200 = Loop drive link count
R-25 = 25 ft. reel
R-50 = 50 ft. reel
R-100 = 100 ft. reel

Note G Miscellaneous Information

CN = Coined
Others may be issued at later dates.

Eddie Turner

Eddie Turner
Service Manager, Forestry Products

Courtesy of Lundee70ss
Do Not Sell or Reproduce

HOMELITE
TEXTRON
Homelite Division of Textron Inc.

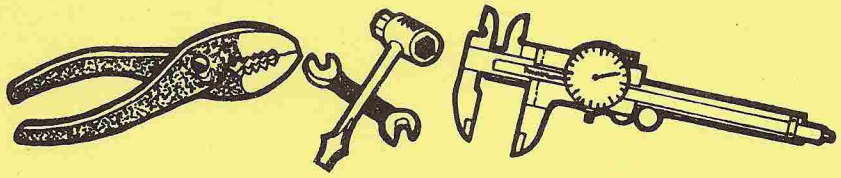

TECHNICAL SERVICE BULLETIN

NO. 183-003

SUBJECT: REPLACEMENT SPROCKETS FOR POWER TIP AND SPROCKET NOSE GUIDE BARS

AFFECTS: MOST CHAIN SAWS

Many dealers are not aware that the sprockets in our power tip and sprocket nose guide bars may be replaced when they become worn or damaged.

Below is a list of sprocket repair kits that are available through service parts.

Repair Kit #	Rivet #	Chain Pitch	Saw Models	Bar Type
A69682-B	96623	1/4 inch	Early XL series	Power tip
A70239-D	96623	.37 and .375	XL series, 240	Power tip
A69496-A	69486	3/8 inch	150, SEZ-AO, SXL-AO, 360, 330, XL-12	Power tip
A67050	67426	3/8 inch	100 series (early bars...PT16503 etc.)	Power tip
A69921-A	69875	3/8 inch	XL-12, SXL-AO, 330, 360, 450, 550	Sprocket nose
A69922-A	69875	.404 inch	450, 550, 650, 750	Sprocket nose
A17742	96623	.325 inch	240	Power tip

Each kit contains a detailed instruction sheet.

When a sprocket fails in a power tip or sprocket nose bar during the warranty period, use a kit to make the repair. Do not replace the entire bar.

A flate rate of .5 hours will be allowed for the repair. Note the following addition in your Flat Rate Manual.

Job #	Description	Time	Failure Code
K-13	R & I guide bar, replace guide bar sprocket	.5	K1-02

DATE 3-83

Courtesy of undee70ss
Do Not Sell or Reproduce

HOMELITE
TEXTRON
Homelite Division of Textron Inc.

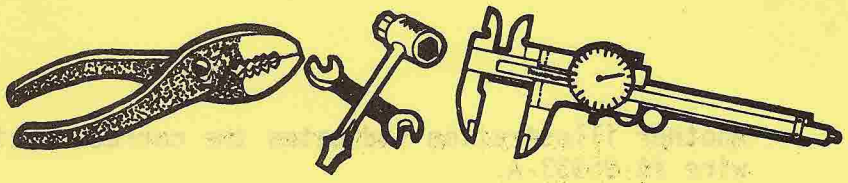

TECHNICAL SERVICE BULLETIN

NO. 183-004

SUBJECT: ROUTING OF SWITCH WIRES

AFFECTS: 330 CHAIN SAWS

If a 330 should "die out" or "misfire" while cutting (particularly when underbucking), it may be because the muffler is coming into contact with and burning through the switch wires.

When this occurs it is because these wires are not routed properly.

Below is an illustration showing the correct routing of the switch wire #A-94668-A from the module to the switch.

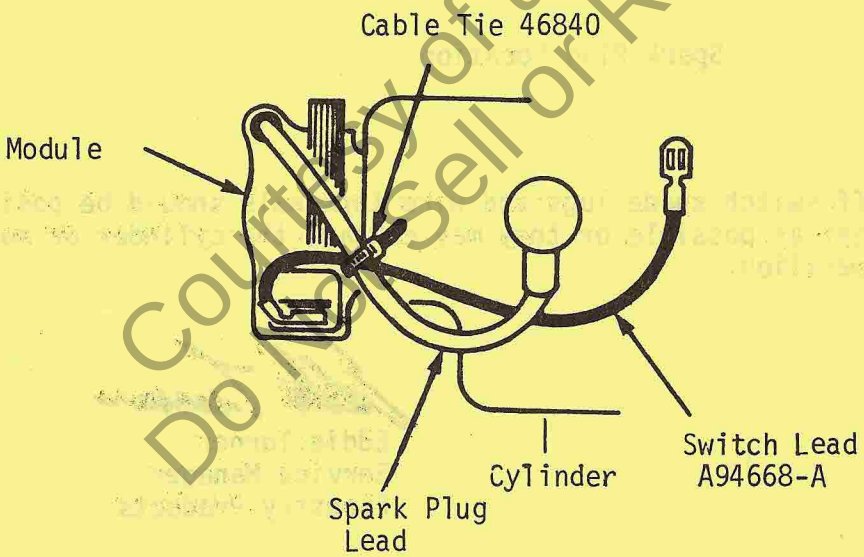

Courtesy of undee70ss
Do Not Sell or Reproduce

Continued

DATE 03/83

Another illustration indicates the correct position of the switch ground wire #A-95933-A.

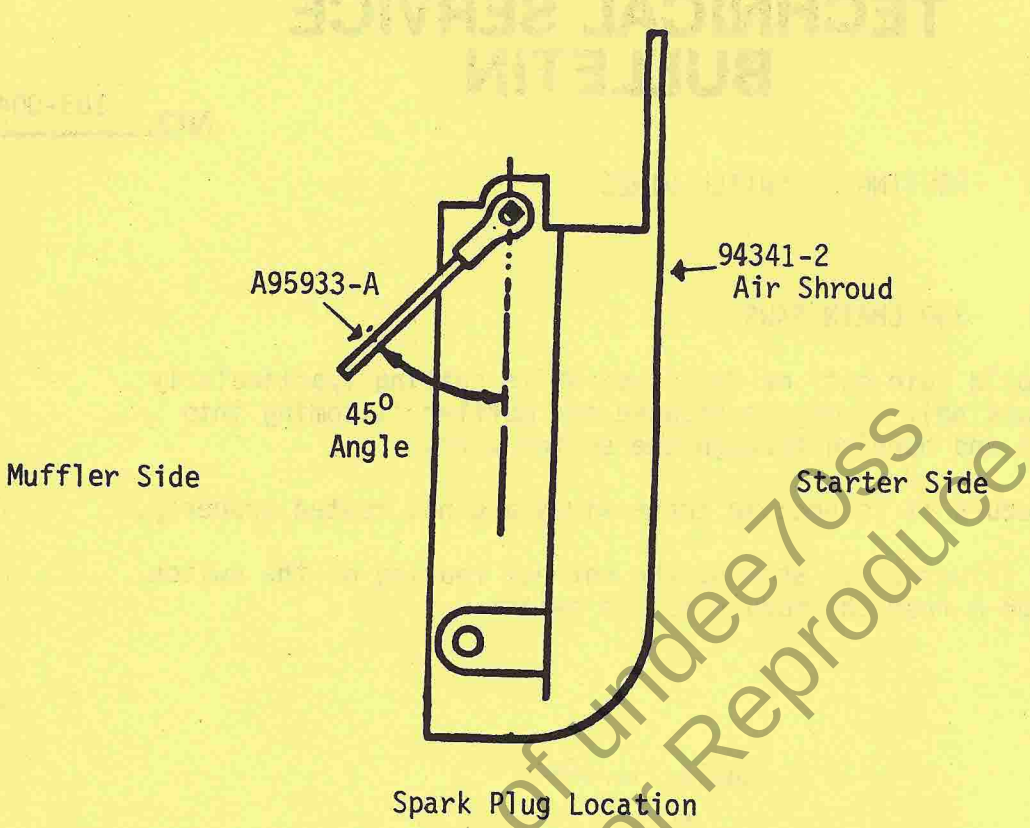

Spark Plug Location

NOTE: The on-off switch spade lugs and wire terminals should be positioned as straight as possible or they may contact the cylinder or muffler during operation.

Eddie Turner
Service Manager
Forestry Products

bh

Courtesy of undee70ss
Do Not Sell or Reproduce

HOMELITE
TEXTRON
Homelite Division of Textron Inc.

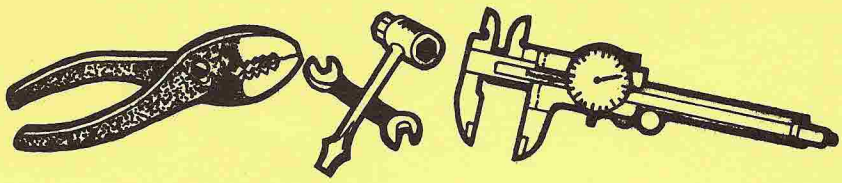

TECHNICAL SERVICE BULLETIN

NO. 183-005

SUBJECT: INCORRECT SPROCKETS IN POWER TIP GUIDE BARS

AFFECTS: PT12371-F4
PT14371-F4
PT16371-F4
PT18371-F4

ALSO: XL SERIES CHAIN SAWS
240 CHAIN SAWS

Some of the guide bars listed above may have the wrong sprocket in the tip. Bars containing the wrong sprocket will not accept the .37 or .375 pitch saw chain.

Correct sprockets may be identified by counting the number of teeth on the sprocket. Correct sprockets will have (9) nine teeth. Incorrect sprockets have (10) ten teeth. See illustrations below.

CORRECT
9 Teeth

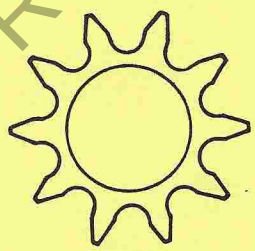

INCORRECT
10 Teeth

Any guide bars found containing the wrong sprockets are to be returned to the closest factory service center. A warranty claim must accompany the guide bars. Ship them U.P.S. and add the freight charge to the claim. Enter the number of this technical bulletin on the warranty claim in the area under the failure code. This will be the authorization to pay the incurred freight.

Shipments of these bars made after 3-4-83 have been checked.

Eddie Turner
Eddie Turner
Service Manager
Forestry Products

ph

DATE 03/83

Courtesy of undee70ss
Do Not Sell or Reproduce

HOMELITE
TEXTRON
Homelite Division of Textron Inc.

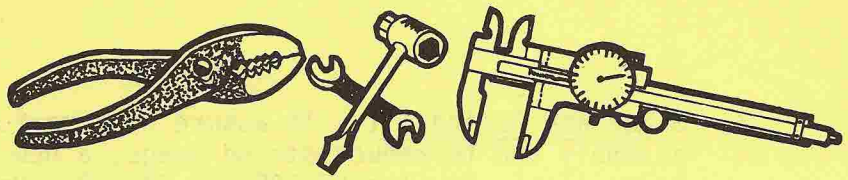

TECHNICAL SERVICE BULLETIN

NO. 183-006

SUBJECT: PRODUCT IMPROVEMENTS FOR 1983

AFFECTS: ST-80, ST-100 and ST-120

Listed below are the improvements that have been made to the gasoline trimmer line. All improvements will "back fit" trimmers built before 1983. This list will provide the new part numbers where necessary.

RECOIL STARTER SYSTEM

1. Starter Rope - The rope will now have a special knot in the pulley end. This will minimize the possibility of the knot coming untied and being pulled through the pulley. This rope will not require the plastic washer 93862-1.The new service rope is number 96648-1. Starter rope is also available in a 250 ft. (75m) reel number 97135.

2. Starter Housing - The starter housing rope eyelets now contain a large powdered metal bushing 96981. This bushing will prevent rope fraying and the rope cannot wear through the bushing to the plastic housing. To install this bushing in older housings, containing the small steel or brass bushing, drill through the existing bushing with a 3/8" (9,5mm) drill bit. Apply an adhesive (Homelite number 70627) to the bushing and press it into the housing. Allow the adhesive to dry. This repair should not be made if the rope has worn a large groove into the plastic housing.

STRING ADVANCE SYSTEM

1. Weld-not Tube - The flexible weld-not tube used on the ST-80 will now be used on the ST-100 and ST-120. Aluminium tube A96509 is superseded by the flexible tube A96518. This will eliminate the breaking problem sometimes experienced when using the aluminium tube.

2. String Head - A new balanced string head A94233-2 is available to decrease vibration. This new string head is used in conjunction with the flexible weld-not tube.

CONTINUED

DATE 04/83

Courtesy of Undee70ss
Do Not Sell or Reproduce

3. Slide and Spring Kit - To assure best performance of the string assembly and to reduce string usage, a new slide and spring kit is available for the ST-100 and ST-120. Part number A97582. The ST-80 requires kit A96199-A and the ST-200 requires kit A95689-A. To achieve the best performance from each model trimmer make sure the correct slide and spring kit is used.

4. Service Replacement String - Replacement string (without the spool) for all trimmers is now available in 50 ft. lenghts. This string can be wound onto existing spools which will lower the cost of replacing string to the customer. Below is a list of part numbers for the pre-cut lengths of string. All string is blister packed.

MODEL	PARTS	LENGTH	STRING DIAMETER
*ST-20, 40, 60	DA92707	50'(15m)	.065 (1,65mm)
ST-80	DA92708	50'(15m)	.065 (1,65mm)
ST-100, 120, 200	DA92709	50'(15m)	.080 (2,0mm)

*The string material for the electric trimmers (ST-20, 40, 60) is different than that for the ST-80. To assure proper string advance on the electric models always use the correct string.

OTHER IMPROVEMENTS

1. New Trigger and Spring Assembly - In order to ease acceleration and to improve the throttle interlock, for easier starting, a new trigger requiring a spring and a new right handle is available. See the illustration below for part numbers.

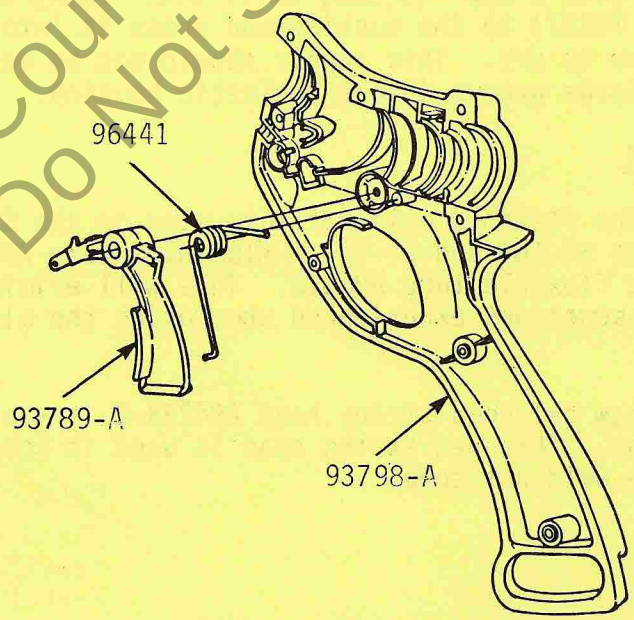

Courtesy of urdee70ss
Do Not Sell or Reproduce

2. Air Cover Modification - When grass packs around the solid state module, the module may over-heat and fail. The air cover has been modified so that grass taken in through the starter housing can be discharged past the module. Currently, this modification is being made to air cover 94693-B. See the illustration below to modify air covers on older trimmers. The 94693-B (not modified) will be supplied through service parts until 94693-C (with modifications) is available.

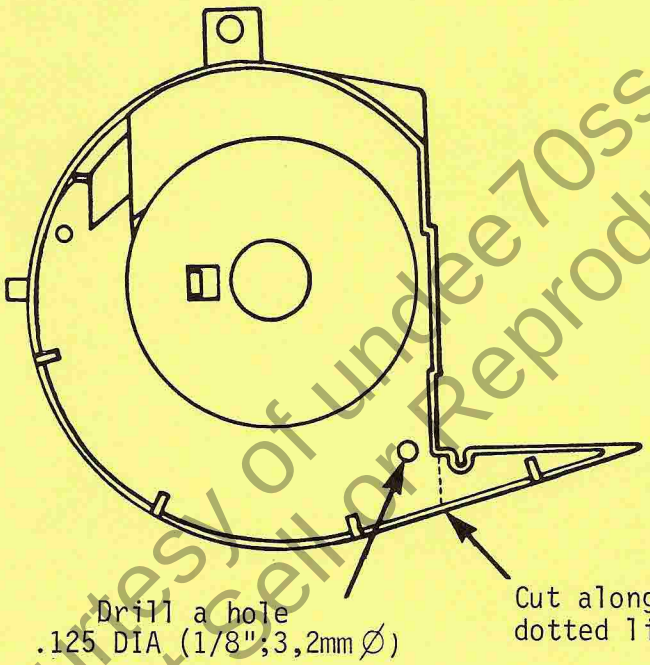

Courtesy of undee70ss
Do Not Sell or Reproduce

INSERT CABLE TIE (46840) THROUGH HOLE TO

SECURE GROUND WIRE TO AIR COVER.

Eddie Turner
Service Manager
Forestry Products

ds

HOMELITE
TEXTRON
Homelite Division of Textron Inc.

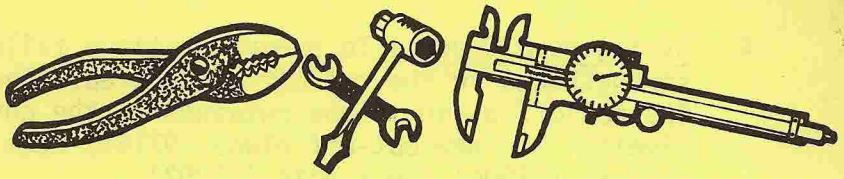

TECHNICAL SERVICE BULLETIN

NO. 183-007

SUBJECT: PRODUCT IMPROVEMENTS FOR 1983

AFFECTS: ST-200

The following is a list of all the improvements that have been made to the ST-200. These will "back-fit" trimmers built before 1983. All 1983 trimmers will have the letter "E" in the serial number. This list will provide the new part numbers where necessary.

RECOIL STARTER SYSTEM

1. Starter Rope - The rope will now have a special knot in the pulley end. This will minimize the possibility of the knot coming untied and being pulled through the pulley. This rope will not require the plastic washer 93862. The new service rope is number 96648-1. Starter rope is also available in a 250 ft. (75m) reel number 97135.

2. Starter Housing - The starter housing rope eyelets now contain a large powdered metal bushing 96981-1. This bushing will prevent rope fraying and the rope cannot wear through the bushing to the plastic housing. To install this bushing in older housings, containing the small steel or brass bushing, drill through the existing bushing with a 3/8" (9,5mm) drill bit. Apply an adhesive (Homelite number 70627) to the bushing and press it into the housing. Allow the adhesive to dry. This repair should not be made if the rope has worn a large groove into the plastic housing.

STRING ADVANCE SYSTEM

1. Weld-not Tube - The flexible weld-not tube used on the ST-80 will now be used on the ST-200. Aluminium tube A96509 is superseded by the flexible tube A96518. This will eliminate the breaking problem sometimes experienced when using the aluminium tube.

2. String Head - A new balanced string head A94233-2 is available to decrease vibration. This new string head is used in conjunction with the flexible weld-not tube.

3. Service Replacement String - Replacement string (without spool) is now available. A blister pack with 50' (15m) of .080 diameter string, for the ST-200, is part number DA92709.

DATE 04/83

Courtesy of Jmlee70ss
Do Not Sell or Reproduce

4. String Head Cover - To prevent fatigue failures the string head cover was strengthened in the cut-off blade area. The new part number is A94473-C. The cut-off blade is now retained to the cover with screws instead of rivets. The new cut-off blade (97169) requires 2 screws (80630), 2 lock-washers (83004) and 2 nuts (81002).

ENGINE AREA

1. New Carburetor - The carburetor has been improved for better over all performance. To prevent fuel line pinching during assembly the carburetor fuel line fitting angle has been changed, the fuel line length increased by one inch and the air baffle modified to accept these changes. The new carburetor will be in a kit to service units built before this change. Included in kit A97601 are a fuel line and instruction sheet.

OLD PARTS		NEW PARTS
A96949 (HDC-69)	CARBURETOR	A97601 (HDC-69-B)
*95688	REPAIR KIT	97136
*70310-26	FUEL LINE	70310-30
94403	AIR BAFFLE	94403-A

*These parts are still available.

2. New Thrust Washers - To eliminate a squealing noise sometimes heard during the "break in" period the crankshaft thrust washers have been replaced with thrust bearings. The seal spacers have been replaced by retaining rings. The crankcase and cylinder now have grooves to accept the retaining rings. The new parts are listed below.

OLD PARTS		NEW PARTS
A94460-1	CRANKCASE & CYLINDER	A97517-1
*69093-B	THRUST WASHERS	95492
*69407	SEAL SPACERS	68514

*These parts are still available to service older units and other XL type engines.

OTHER IMPROVEMENTS

1. Stronger Brushcutter Gear - The gear in the brushcutter has been strengthened by increasing it's thickness. To do this the large single ball bearing was replaced by two smaller ball bearings. In an effort to offer the best parts possible for servicing the brushcutter, the bearing (56219), the gear (94418-1) and the blade shaft (94416) will be supplied as a complete assembly. The assembly number is A94431-1A.

2. Improved Clutch Drum - The "slip clutch" function of the clutch drum has been eliminated and sleeve bearing was lengthened. These changes will increase the service life of both parts. The new drum must be used in conjunction with the longer sleeve bearing. A drum kit A97241 is available that includes the longer sleeve bearing 97240.

Eddie Turner
Service Manager
Forestry Products

Courtesy of unbeZOss
DO NOT Sell or Reproduce

HOMELITE
TEXTRON
Homelite Division of Textron Inc.

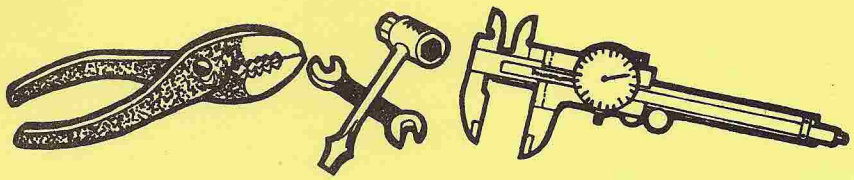

TECHNICAL SERVICE BULLETIN

NO. 183-008

SUBJECT: Pistons without a piston ring stop pin

AFFECTS: XL family, ST family, HB blowers and P-100 pumps

The above mentioned units are now being produced with pistons that do not have piston ring stop pins. The cylinder exhaust port now has a "bridge" down the center. This bridge will prevent the piston ring from clipping the exhaust port should the ring rotate.

Service parts will continue to supply only pistons with stop pins. These pistons may be used with any type of cylinder regardless of the exhaust port design. Piston rings will be available to service both types of pistons. Piston ring 69312 will service pistons with a stop pin. Piston ring 96935 will service pistons without a stop pin.

Courtesy of Undee70ss
Do Not Sell or Reproduce

Eddie Turner
Service Manager
Forestry Products

ph

DATE 06/83

HOMELITE JACOBSEN

TECHNICAL SERVICE BULLETIN

NO. 183-009

SUBJECT: Fuel Shut Off Valve A-97117

AFFECTS: ST-80, ST-100, ST-120 (Lot # E119 and above)

A new fuel shut off valve A-97117 (pictured below) is being incorporated into the above mentioned string trimmers.

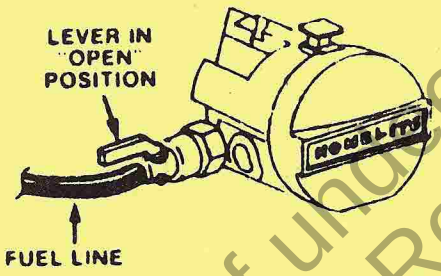

In order to use this valve the fuel lines have been shortened. Fuel line 93157-24 (6", 152mm) is replaced by fuel line 94772-22 (5½", 140mm) on the ST-80 and ST-100. Fuel line 93157-27 (6 3/4", 171mm) is replaced by fuel line 94772-25 (6¼",158mm) on the ST-120.

The ST-120 fuel line insulating sleeve 95098 (4¼", 114mm) can be shortened to 3 3/4" (95mm) for use with the new fuel valve. A new fuel line insulating sleeve 97173 (3 3/4", 95mm) is available for use on the ST-80, ST-100 and ST-120.

Courtesy of uncle70ss
Do Not Sell or Reproduce

Eddie Turner
Service Manager
Forestry Products

ph

HOMELITE JACOBSEN

TECHNICAL SERVICE BULLETIN

NO. 183-010

SUBJECT: CHANGE OF SPARK PLUG TYPE

AFFECTS: 360-AO

It has been reported that, occasionally, the spark plug on the 360-AO will loosen in the cylinder. As a result, the ground electrode of the spark plug may break off and do considerable damage to the engine. To prevent this, the type of spark plug used in the 360 has been changed. The "tapered seat" spark plug 65130-S (DJ-6J) is replaced by spark plug 63547-S (C-J6).

Spark plug 63547-S is a "gasket seat" type. This plug is currently used in the SXL-AO.

Courtesy of undee7055
Do Not Sell or Reproduce

Eddie Turner
Service Manager
Forestry Products

ph

HOMELITE JACOBSEN

TECHNICAL SERVICE BULLETIN

NO. 183-011

SUBJECT: PACKAGING ERROR

AFFECTS: CLUTCHES 68362-7 and 68362-6

Some packages marked 68362-7 contain clutches part number 68362-6. The 68362-7 is for the 150 and SEZ-AO. The 68362-6 is for the 240.

Identify the clutches in your stock and correct part numbers on the packages accordingly.

Use the illustrations and descriptions below to identify each clutch.

Back View of Clutch

68362-7 68362-6

Courtesy of undee70ss
Do Not Sell or Reproduce

Description:

68362-7
Center hole 3/8 - 24 thread tapped all the way through
Clutch cover holes 10 - 32 thread tapped all the way through

68362-6
Center hole 7/16 - 20 thread counterbored
Clutch cover holes 10 - 32 thread countersunk

Eddie Turner
Service Manager
Forestry Products

ph

HOMELITE TEXTRON
Homelite Division of Textron Inc.

DATE 08/83

HOMELITE JACOBSEN

TECHNICAL SERVICE BULLETIN

NO. 183-012

SUBJECT: IGNITION TEST

AFFECTS: 360, 550, 750, DM-50 and DM50-1

The current ignition test lamp A24994 will no longer be available. An alternative method for testing the ignition system on the above mentioned models is explained in the following paragraphs.

In order to make a test apparatus, the following material will be required:

1 - Test spark plug JA-313164
3 - Pieces of insulated wire 12" to 15" in length
1 - Solderless ring tongue terminal eyelet
2 - Medium sized alligator clips
1 - 10-24 X 3/8" screw

Refer to the illustration during assembly. Strip about 1/2" of the insulation off each end of the wires. Connect two wires with the "eyelet". After doing this attach an alligator clip to one of the remaining two wire ends. Attach the other clip to one end of the third wire.

Follow test procedure listed on the back.

Courtesy of Undee7055
Do Not Sell or Reproduce

Eddie Turner
Service Manager
Forestry Products

ph

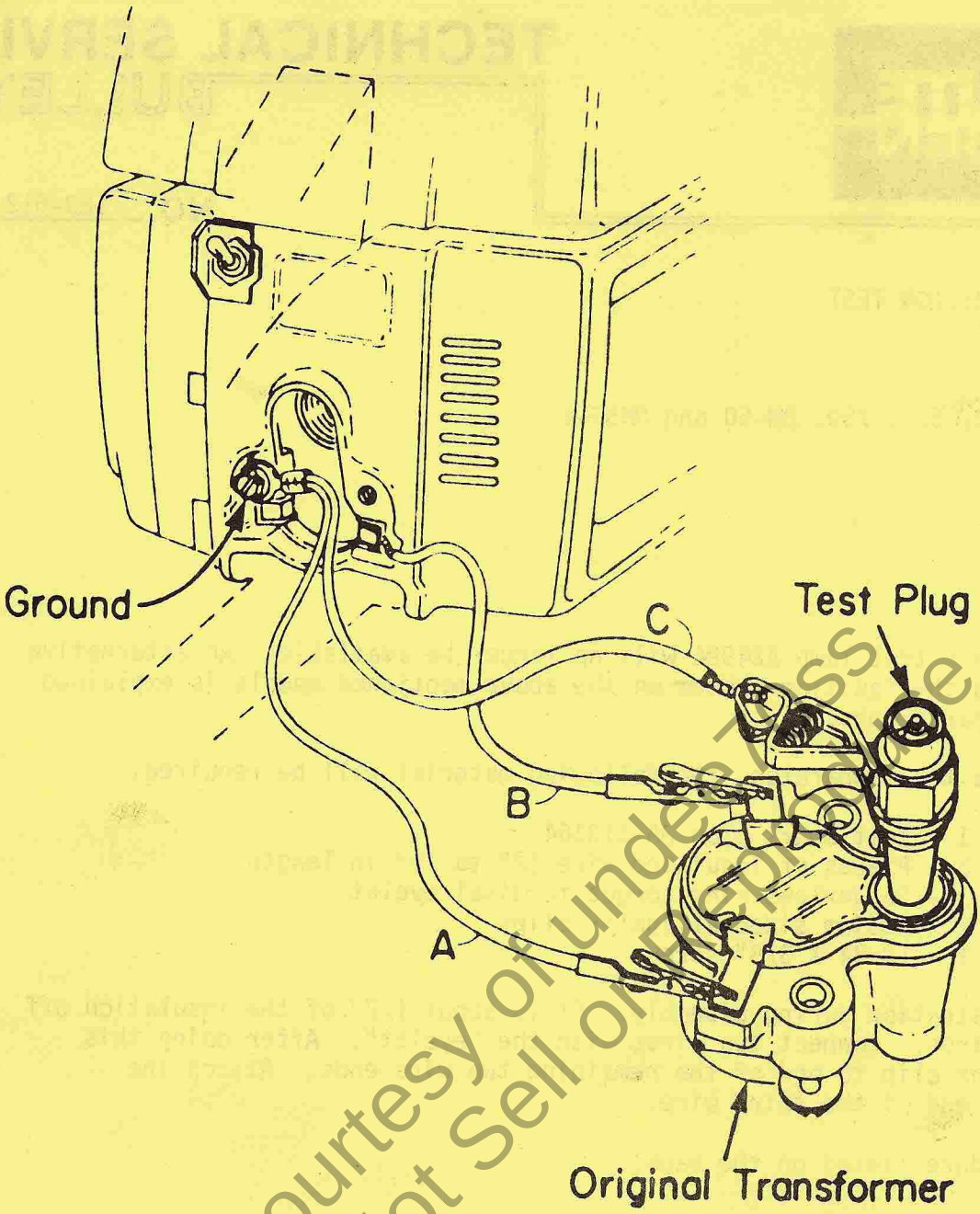

Courtesy of under Toss
Do Not Sell or Reproduce

TEST PROCEDURE

1. Refer to the illustration for proper wire hook ups.
2. Note that wire "B" is placed underneath the receptacle tab.
3. If the type of test plug shown is not available make one by breaking the ground electrode off of a new spark plug. Skin more insulation off the test lead and wrap it around the plug threads.
4. Push the switch to the run position and pull the starter rope briskly.
5. If a spark is seen replace the test plug with the original plug and retest.
6. If no spark is seen with the test plug substitute a new transformer for the original and retest.
7. After completing step 6 and still no spark is evident, suspect a bad module, loose connections or a faulty switch.

HOMELITE JACOBSEN

TECHNICAL SERVICE BULLETIN

NO. 183-013

SUBJECT: INCORRECT THROTTLE CABLE ADJUSTMENT

AFFECTS: ST-80, ST-100, ST-120

It is important that the throttle cable be properly adjusted and should be checked when servicing one of the above mentioned trimmers.

If the cable is out of adjustment, the trimmer will not reach maximum speed and the string will not advance. Also, it may stall and "die-out" at wide open throttle.

With the trigger fully depressed remove the air filter cover and observe the carburetor venturi. A properly adjusted cable stops the throttle shutter in the center of the venturi. See Figure A. A cable that is not adjusted properly allows the shutter to travel past center which creates first, maximum R.P.M.'s and then reduced R.P.M.'s. See Figure B.

Courtesy of unit 67055
Do Not Sell or Reproduce

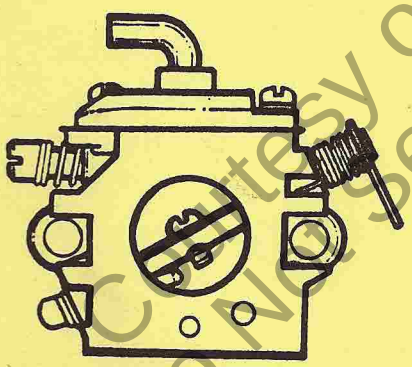

Figure A

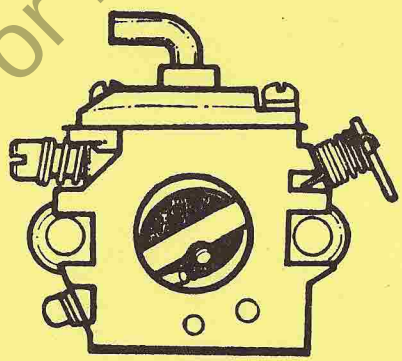

Figure B

Eddie Turner
Service Manager
Forestry Products

ph

HOMELITE JACOBSEN

TECHNICAL SERVICE BULLETIN

NO. 183-015

SUBJECT: MUFFLER CAP 93348-1A

AFFECTS: 410 CHAIN SAW

A special muffler cap (See Figure 2) was designed to meet the lower noise levels required by the French government. Some of these caps were placed on saws that were shipped within the United States.

If a new 410 sounds muffled or has low power it may contain the wrong muffler cap. The correct cap is pictured below in Figure one.

Courtesy of undee70ss
Do Not Sell or Reproduce

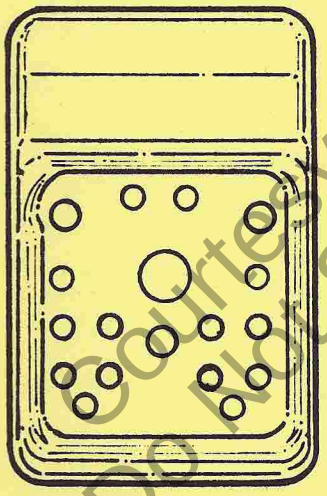

Figure 1

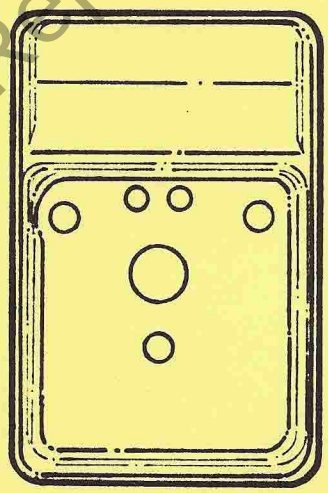

Figure 2

The cap shown in Figure 2 is to be used in France only.

Eddie Turner
Service Manager
Forestry Products

ph

HOMELITE JACOBSEN

TECHNICAL SERVICE BULLETIN

NO. 183-016

SUBJECT: MANUAL OIL PUMP WILL NOT WORK

AFFECTS: 245 CHAIN SAW UT10638
SERIAL NUMBER 0E2630000 and BELOW

If the manual oil pump on a new 245 does not work, suspect that the oil lines are crossed.

Remove the two manual pump lines from the automatic oiler. Place a small amount of oil on the end of each line. Depress the manual pump button several times. The oil will be blown out of the discharge line.

Place this line onto the manual oiler discharge fitting of the automatic oil pump. Place the other line onto the inlet fitting. See Figure below.

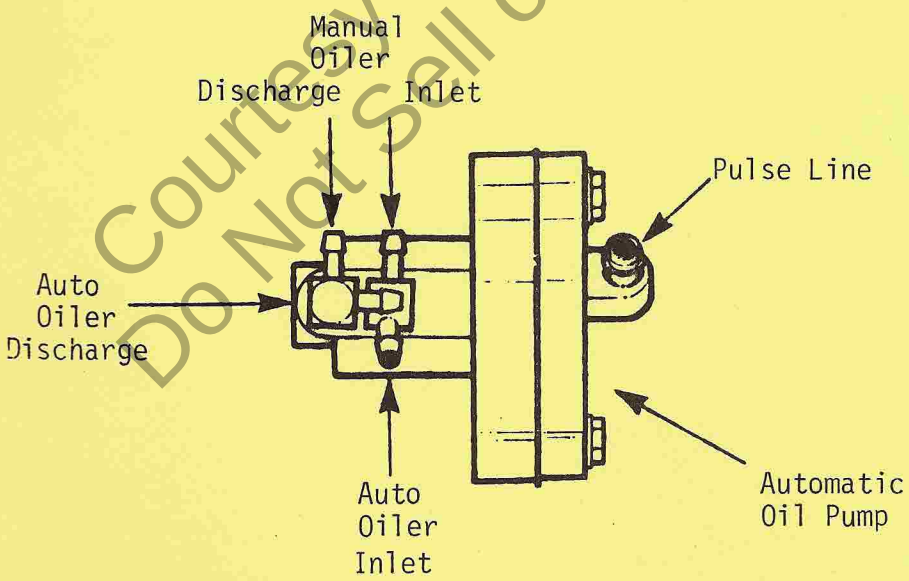

Courtesy of undee 70ss
Do Not Sell or Reproduce

Eddie Turner
Service Manager
Forestry Products

ph

HOMELITE TEXTRON
Homelite Division of Textron Inc.

DATE 10/83

HOMELITE JACOBSEN

TECHNICAL SERVICE BULLETIN

NO. 183-017

SUBJECT: NEW THRUST WASHERS

AFFECTS: ST-80, ST-100, ST-120, ST-200
HB-280, HB-480, HB-680

To eliminate a squealing noise sometimes heard during the "break in" period, the crankshaft thrust washers have been redesigned. The seal spacers have been replaced by retaining rings. The crankcase and cylinder now have grooves to accept the retaining rings. The new parts are listed below:

	OLD PARTS		NEW PARTS
ST-80	A-95332-3	Crankcase & Cylinder	A-97528-2
	* 69093-B	Thrust Washers	95492
	* 69407	Seal Spacers	68514
ST-100, ST-120 HB-280, HB-480	A-96906-2	Crankcase & Cylinder	A-97529-2
	* 69093-B	Thrust Washers	95492
	* 69407	Seal Spacers	68514
ST-200	A-94460-1	Crankcase & Cylinder	A-97517-1
	* 69093-B	Thrust Washers	95492
	* 69407	Seal Spacers	68514
HB-680	A-95730	Crankcase & Cyliner	A-97530
	69093-B	Thrust Washers	95492
	69407	Seal Spacers	68514

*These parts are still available to service older units and other XL type engines.

Courtesy of Lindee7055
Do Not Sell or Reproduce

Eddie Turner
Service Manager
Forestry Products

ph

HOMELITE JACOBSEN

TECHNICAL SERVICE BULLETIN

NO. 183-018

SUBJECT: NEW MUFFLER SPACERS

AFFECTS: SEZ-AO ABOVE SERIAL NUMBER 0E0200000

In order to decrease the temperature of the muffler deflector, the distance between the muffler deflector and the muffler cap was increased. This was done by lengthening the two existing spacers and adding a third spacer.

The illustration below indicates the part numbers of the new spacers and longer screws necessary for this change.

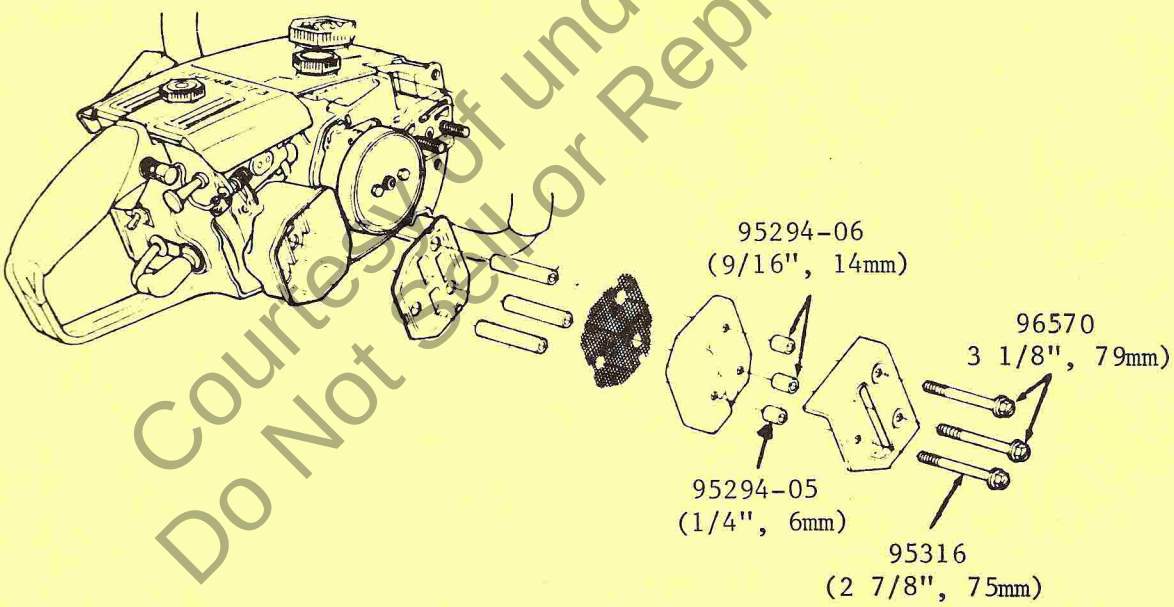

Courtesy of undee7055
Do Not Sell or Reproduce

Eddie Turner
Service Manager
Forestry Products

ph

HOMELITE JACOBSEN

TECHNICAL SERVICE BULLETIN

NO. 183-019

SUBJECT: U-HAUL RENTAL SAW (UT 10645)

AFFECTS: SERVICING DEALERS

Homelite has produced a special rental saw (UT 10645) for the U-Haul rental system. These units are not for resale and are marked "Property of U-Haul". They are orange in color and similar to the S/XL-AO.

If a unit is brought in for repair or warranty service, it must have a U-Haul purchase order with it.

DO NOT accept any of these units for repair or warranty work without a U-Haul purchase order. Warranty on these units is in effect for 90 days after the saw is placed in rental service. If you perform a warranty repair, place the purchase order number on the claim in Box #4, on the line "owner's signature".

Any warranty claim sent in without the U-Haul purchase order, will not be processed.

If you have a question as to the status of a particular unit, please contact the local U-Haul office.

Thank you,

Bob Donahey

Bob Donahey
Manager Technical Service

ph

Courtesy of Tree Ross
Do Not Sell or Reproduce

HOMELITE JACOBSEN

TECHNICAL SERVICE BULLETIN

NO. 183-020

SUBJECT: SERVICE PISTONS

AFFECTS: 410 CHAIN SAW SERIAL NO. 0D3190000 & ABOVE

Leon's Chainsaw Parts & Repair
Do Not Sell or Reproduce

As stated in a previous bulletin, the cylinder and piston for the 410 are now being matched for maximum performance. In order to service the piston only on saws with matched components, we now have available three different size pistons.

The bore size is measured on each cylinder. The cylinders are then sorted by size into five different categories. Each cylinder is marked according to its category (see illustration #1), number 1 being the smallest and number 5 being the largest.

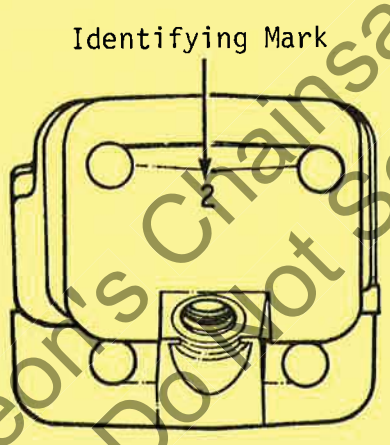

Cylinder
Ill. #1

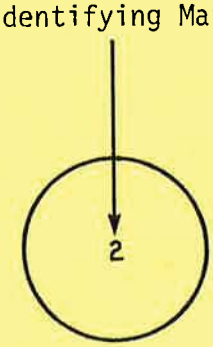

Piston
Ill. #2

Pistons are also measured and marked accordingly. See Illustration #2. The following chart will indicate which piston to use when servicing a 410.

PISTON ID MARK		CYLINDER ID MARK	CYLINDER SIZE
(2)	A-97794-2	1	1.9370 - 1.9375
		2	1.9375 - 1.9380
(3)	A-97794-3	3	1.9380 - 1.9385
(4)	A-97794-4	4	1.9385 - 1.9390
		5	1.9390 - 1.9395

Note the cylinder diameters in the right hand column. A number 2 piston will service a number 1 and number 2 cylinder because there is only .001 (.025mm) maximum difference in the cylinder diameters. However, a number 2 piston should not be used to service a number 3, 4 or 5 cylinder. Using the wrong piston in a cylinder may lead to an early failure of the two parts.

Eddie Turner
Service Manager
Forestry Products

ph

Leon's Chainsaw Parts & Repair
Do Not Sell or Reproduce

HOMELITE JACOBSEN

TECHNICAL SERVICE BULLETIN

NO. 183-021

SUBJECT: MAGNESIUM STARTER HOUSING A-65222-1

AFFECTS: SEZ-AO

A quantity of magnesium starter housings are still available for the SEZ-AO. These housings will service saws built before the introduction of the plastic starter housing.

Also, all parts associated with this housing (pulley, recoil spring, spring cover, etc.) are still available. Refer to the latest SEZ-AO parts list, 24522-A Revision 3, for the numbers of the above mentioned parts.

Eddie Turner
Service Manager
Forestry Products

ph

Leon's Chainsaw Parts & Repair
Do Not Sell or Reproduce

HOMELITE JACOBSEN

TECHNICAL SERVICE BULLETIN

NO. 183-022

SUBJECT: IMPROVED MODEL

AFFECTS: 410 CHAIN SAWS UT-10486-B, UT-10587-B and UT-10597-B

An improved version of the 410 chain saw is now available. Listed below are details of the improvements and part numbers for servicing the new and old saws.

1. New Piston Pin Bearing - A new longer piston pin bearing is being used to increase bearing life. See below for details and part numbers.

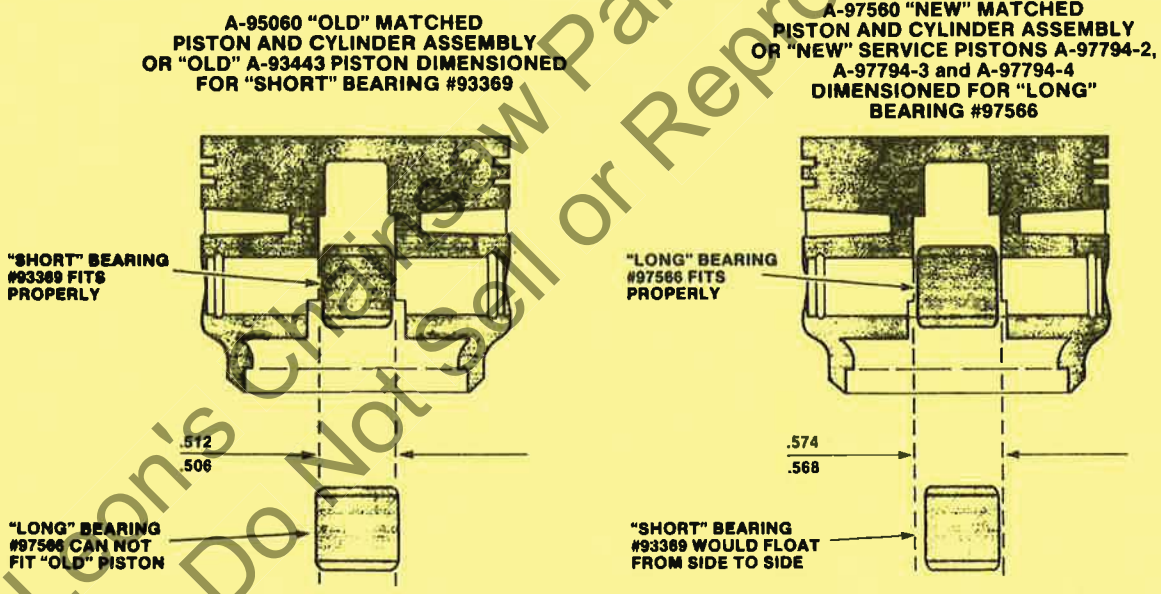

The new crankshaft assembly A-97567 will have the longer bearing 97566 pressed into the connecting rod. A short bearing 93369 will be packed with the assembly. When servicing an older saw, remove the long bearing and install the short one using the service tool provided.

Leon's Chainsaw Parts & Repair
Do Not Sell or Reproduce

IMPORTANT: Read the instructions, provided with each assembly, carefully. Use the tools provided. Proper matching of parts is necessary to avoid engine damage.

2. Improved Sealing of Carburetor Chamber - In order to substantially reduce the amount of sawdust entering the carburetor chamber, two major changes were made. The cover sealing gasket was enlarged and an extra fastener and a gasket were added to the carburetor adapter. See illustrations for details and part numbers.

OLD DESIGN

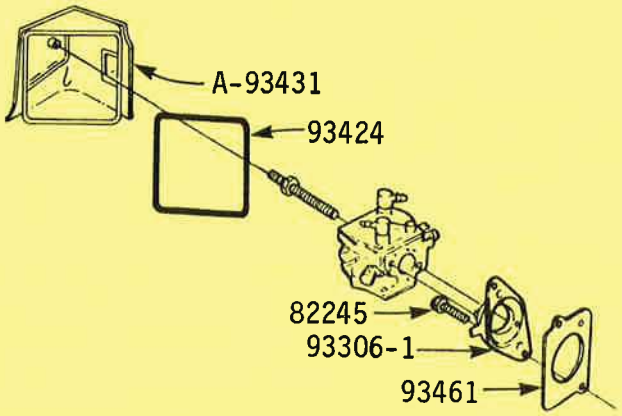

NEW DESIGN

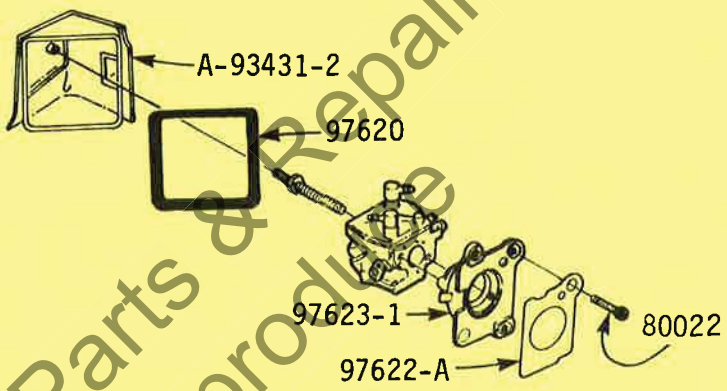

When assemblying the new gasket 97620 to the carburetor cover note that the two "cut-out" corners are to be placed at the top of the cover. See Illustration.

Shaded areas indicate "cut-out" corners.

97620

A bead of cement 22788 should be used to retain the gasket to the cover.

Leon's Chainsaw Parts & Repair
Do Not Sell or Reproduce

Also added for better sealing are two gaskets 97635. These gaskets are located above and below the air filter support 93364. See Illustrations.

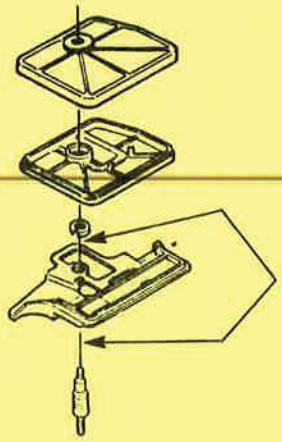

3. Improved Starter Rope - A new starter rope 97500 is available to service all 410 chain saws. This new rope has a smaller core and a larger jacket. This makes the rope stronger and more flexible. A more flexible rope returns easier and wears longer.

4. Improved Bumper Spike Retention - Two new bumper spike screws 97636 are being used with two plastic sealing washers 97633 for better retention of the bumper spike. The plastic washers collapse and fill the pocket in the casting as the nuts are tightened.

5. Other Improvements - The cylinder exhaust port has been redesigned to reduce the noise level of the saw. Also, the piston ring gaps are staggered for a slight power improvement.

Eddie Turner
Service Manager
Forestry Products

ph

Leon's Chainsaw Parts & Repair
Do Not Sell or Reproduce

HOMELITE JACOBSEN

TECHNICAL SERVICE BULLETIN

NO. 283-001

SUBJECT: FLUID CONTROL VALVE A-95766

AFFECTS: HB680 BACK-PACK BLOWER

We have had reports that the fluid tank on our HB680 empties too fast for certain applications. Enclosed is a cross section picture of the control valve with a piece of tubing (part number 93157-02) in the output spout. A tank of fluid will last twice as long by installing this tube in the valve. Be sure to install the rubber tube as described below.

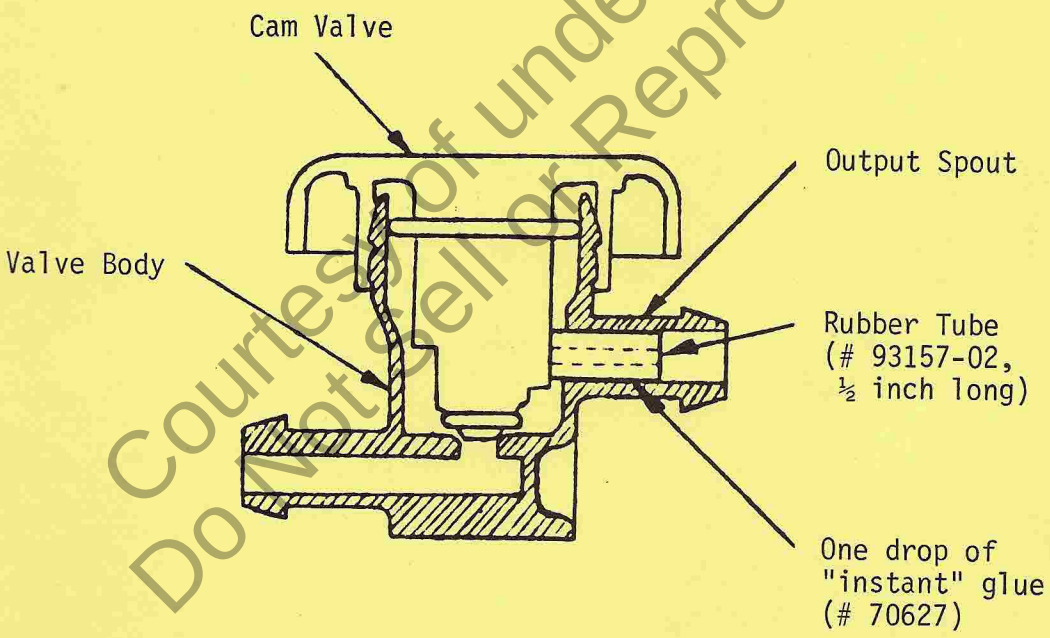

Courtesy of undee7055
Do Not Sell or Reproduce

With the cam valve in place, align the number 1 on the valve cap with the output spout. Insert the rubber tube until seated. Apply one small drop of "instant" glue (part number 70627) between the rubber tube and the inner wall of the output spout.

Rick Mason
Service Manager
Construction Equipment

ph

HOMELITE TEXTRON
Homelite Division of Textron Inc.

DATE 11/83

HOMELITE JACOBSEN

TECHNICAL SERVICE BULLETIN

NO. 283-002

SUBJECT: PLUGS AND PLUG COVERS

AFFECTS: VCH-178 and VCH-250

On the above vibrators, the male plug, # 62162 has been superseded to # 48849. There is also a new rubber cover # 48850. This is the only cover that will fit the # 48849 male plug due to the size of the plug.

Please add these new part numbers to your parts list.

OLD NUMBERS		NEW NUMBERS	
62162	male plug	48849	male plug
36775	cover	48850	cover

Courtesy of undee70ss
Do Not Sell or Reproduce

Rick Mason
Service Manager
Construction Equipment

ph

HOMELITE JACOBSEN

TECHNICAL SERVICE BULLETIN

NO. 283-003

SUBJECT: SERVICE ENGINE

AFFECTS: PCA 20

Briggs and Stratton has discontinued the large frame 4 hp engine used on the PCA 20 asphalt compactor.

In the past, Homelite has serviced the PCA 20 with a complete engine, part number A-51398-S. We will have a limited number of these engines in stock for service. When the stock is exhausted the unit must be serviced with a short block. The short block part number is 29925, and is available only through Briggs and Stratton.

Rick Mason
Service Manager
Construction Equipment

ph

Courtesy of undee70ss
Do Not Sell or Reproduce

HOMELITE TEXTRON
Homelite Division of Textron Inc.

DATE 11/83